Journal of Hazardous Materials 393 (2020) 122433

Contents lists available at ScienceDirect

Journal of Hazardous Materials

journal homepage: www.elsevier.com/locate/jhazmat

Review

Metal recovery from incineration bottom ash: State-of-the-art and recent developments

Michal Šyc[a,*], Franz Georg Simon[b], Jiri Hykš[c], Roberto Braga[d], Laura Biganzoli[e], Giulia Costa[f], Valerio Funari[d,g], Mario Grosso[e]

[a] Institute of Chemical Process Fundamentals, Czech Academy of Sciences, Rozvojová 135, Prague 6, Czech Republic
[b] BAM Bundesanstalt für Materialforschung und -prüfung, Unter den Eichen 87, 1205, Berlin, Germany
[c] Danish Waste Solutions ApS, Agern Allé 3, 2970, Hørsholm, Denmark
[d] Dipartimento di Scienze Biologiche Geologiche e Ambientali (BiGeA), Università di Bologna, Piazza di Porta San Donato 1, 40126, Bologna, Italy
[e] Department of Civil and Environmental Engineering (DICA), Politecnico di Milano, Piazza L. da Vinci 32, 20133, Milano, Italy
[f] Laboratory of Environmental Engineering, Department of Civil Engineering and Computer Science Engineering (DICII), University of Rome Tor Vergata, via del Politecnico 1, 00133, Rome, Italy
[g] Dipartimento di Biotecnologie, Stazione Zoologica Anton Dohrn (SZN), Villa Comunale, 80121, Naples, Italy

GRAPHICAL ABSTRACT

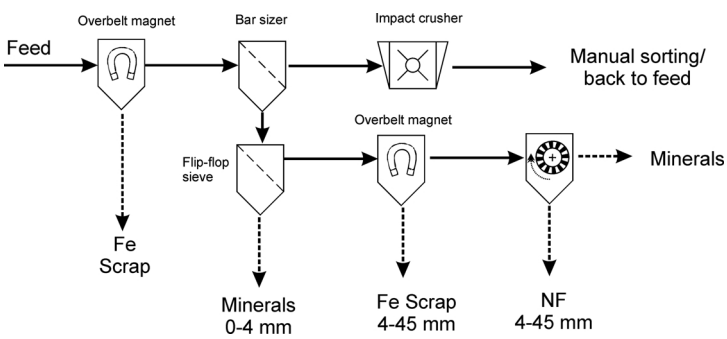

ARTICLE INFO

Editor: G. Lyberatos

Keywords:
Bottom ash
Metal recovery
Waste-to-energy
Non-ferrous metals
Iron scrap

ABSTRACT

Municipal solid waste incineration (MSWI) is one of the leading technologies for municipal solid waste (MSW) treatment in Europe. Incineration bottom ash (IBA) is the main solid residue from MSWI, and its annual European production is about 20 million tons. The composition of IBA depends on the composition of the incinerated waste; therefore, it may contain significant amounts of ferrous and non-ferrous (NFe) metals as well as glass that can be recovered. Technologies for NFe metals recovery have emerged in IBA treatment since the 1990s and became common practice in many developed countries. Although the principles and used apparatus are nearly the same in all treatment trains, the differences in technological approaches to recovery of valuable components from IBA – with a special focus on NFe metals recovery – are summarized in this paper.

* Corresponding author.
E-mail address: syc@icpf.cas.cz (M. Šyc).

https://doi.org/10.1016/j.jhazmat.2020.122433
Received 11 December 2019; Received in revised form 27 February 2020; Accepted 28 February 2020
Available online 29 February 2020
0304-3894/ © 2020 The Authors. Published by Elsevier B.V. This is an open access article under the CC BY-NC-ND license (http://creativecommons.org/licenses/BY-NC-ND/4.0/).

1. Introduction

Municipal solid waste incineration (MSWI) is one of the leading technologies for municipal solid waste (MSW) treatment in Europe. According to Eurostat data, in 2015, 27 % of MSW, i.e., more than 80 million tons per year, was treated in MSWI plants. Therefore, Europe's annual production of incineration bottom ash (IBA) is about 20 million tons, as it makes up about 25 % of the weight of input MSW (Lamers, 2015). In the EU List of Waste (LoW), IBA is listed as a "mirror entry"; i.e. a waste from the same source that might under the LoW be allocated to a hazardous entry (19 01 12) or to a non-hazardous entry (19 01 11) depending on the specific case and on the composition of the waste.

Besides the utilization of waste's energy content, MSWI allows the recovery of various valuable components; hence, MSWI is an integral part of the circular economy concept (Van Caneghem et al., 2019; Pan et al., 2015; Malinauskaite et al., 2017). IBA is a secondary source particularly of ferrous (Fe) and non-ferrous (NFe) metals and glass. The technologies for metals recovery from IBA have developed significantly during the last decade and have become an important integration to MSWI facilities all over Europe. Glass recovery is also gaining momentum, with some applications starting to appear on the market.

Moreover, the mineral fraction left after the recovery of metals can be utilized in a number of ways which are in different stages of maturity and acceptance by authorities/public and have different potentials for the management of the bulk mass of IBA, different costs and different environmental impacts. A detailed discussion of this topic is outside of the scope of this review, but for the sake of clarity it could be mentioned that, historically, utilization as a landfill cover or material for the construction of roads on the landfill site was the main management option. Over the last 20 years, an increasingly larger portion of the mineral fraction was being utilized in many European countries as unbound construction aggregates; typically as a subbase layer in road constructions thereby replacing natural materials (Blasenbauer et al., 2020). At a somewhat smaller scale, utilization of the mineral fraction as a replacement for natural materials (sand, gravel, cement) in construction materials like mortar, different types of concrete, premanufactured construction products (e.g. building blocks), light-weight aggregates, and asphalt was reported elsewhere (Lynn et al., 2017; Hyks and Hjelmar, 2018). In some countries, the mineral fraction – or part of it – may be used as a replacement for raw material in cement production or as feedstock for glass, glass-ceramics, and ceramic production. Overall, the management options for the mineral fraction originating from metal-separated IBA are affected by applied pretreatment (e.g. washing, crushing) which is affected by the intended application. In some countries, the fine fraction of IBA may need to be removed, because the presence of this fraction (often enriched with trace elements) may hamper the utilization of the mineral fraction in the construction sector. Naturally, by removing the fine fraction a new waste stream (contaminated with e.g. trace metals) is generated and needs to be managed properly. On the other hand, in other countries, where IBA is utilized as unbound aggregate in e.g. road constructions, removing the fine fraction may not be necessary and may even be undesirable, since this may negatively affect the particle size distribution of the IBA-gravel, limit its suitability for construction applications and ultimately lead to landfilling of large bulks of IBA (Hyks and Hjelmar, 2018).

The aim of this paper is to present a comprehensive review of various technological approaches to recovery valuable components from IBA, with a particular interest in NFe metals recovery.

2. IBA properties and chemical composition

2.1. Physical properties and elemental composition

IBA is gray or dark gray-colored heterogeneous material with the elemental composition given by the composition of the incinerated waste. The main constituents of IBA are typical ash-forming elements (e.g. Si, Al, Ca, and Fe) and a variety of other elements, some of them of environmental concern (see Table 1) that is mostly related to their leaching. As there are many studies on the leaching of elements of potential environmental concern from the mineral fraction of IBA (see e.g. Silva et al., 2019 and references therein), this matter will not be discussed further in this paper.

Table 1
IBA elemental composition (Astrup et al., 2016).

Ash-forming elements (mg/kg)		Minor and trace elements (mg/kg)	
Al	14,000–79,000	As	0.12–190
Ca	8,600–170,000	Ba	69–5,700
Fe	3,100–150,000	Cd	0.3–70
K	660–16,000	Cu	190–25,000
Mg	240–26,000	Cr	20–3,400
Mn	7.7–3,200	Mo	2.5–280
Na	2,200–42,000	Ni	7.0–4,300
P	440–10,500	Pb	74–14,000
Si	4,300–308,000	Se	0.05–10
		Sn	2.0–470
		Tl	0.008–0.23
		V	16–120
		Zn	10–20,000

The bulk density of uncompacted IBA is typically 1,200-1,800 kg/m^3. The pH value of fresh IBA is 10.5-12.0. The moisture content is related to the type of discharge: wet or dry. Wet discharged IBA has a moisture content of about 18–25 %, with the majority of the moisture content allocated to the fine fraction; dry discharged IBA has a moisture content below 1%. The loss of ignition of IBA is usually 1–3 % (Lynn et al., 2017). All values refer to weight-% unless specified otherwise.

IBA contains particles from a few micrometers up to several centimeters in size. Usually, 30–40 % of its particles are smaller than 2 mm and about 20 % are larger than 2 cm (Šyc et al., 2018a, Huber et al., 2020). A typical range of particle size distribution is shown in Fig. 1.

2.2. Mineralogy

The mineralogical composition of IBA has been extensively investigated over the years, both from a qualitative and, more recently, a quantitative point of view. Mineralogical analyses aim to identify: (i) the main crystalline phases occurring in the bulk material or in specific particle size and/or material fractions (e.g. Fe fraction, glass fraction, etc.) (Bayuseno and Schmahl, 2010; Chimenos et al., 2003; Eusden et al., 1999); (ii) phases bearing heavy metals (Wei et al., 2011), and (iii) the effects of natural weathering or other treatments on IBA

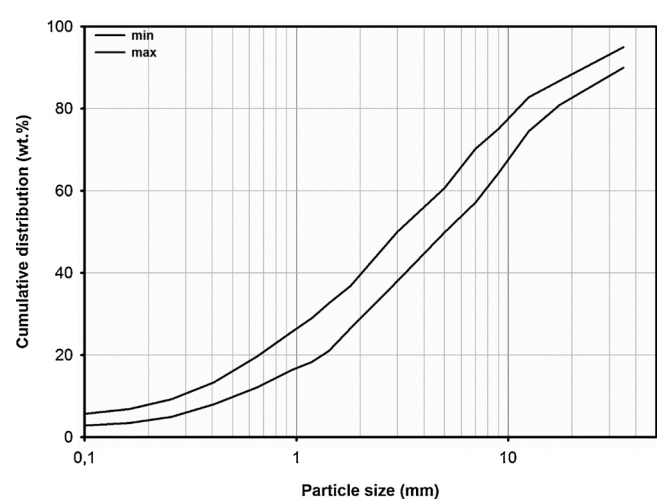

Fig. 1. Typical particle size distribution of IBA (Šyc et al., 2018a).

mineralogy (Chimenos et al., 2003; Piantone et al., 2004). Most studies define IBA mineralogy as complex, due to its multi-component, partially amorphous characteristics (Wei et al., 2011). IBA contains solid phases with high melting points that were already present in the original waste. These so-called refractories include metals, ceramics, glass fragments, unburned materials, and minerals such as quartz, K-feldspar, plagioclase and biotite. In addition, IBA contains melt products (glass and mineral phases) formed due to high-temperature combustion (Bayuseno and Schmahl, 2010; Eusden et al., 1999; Inkaew et al., 2016). These latter products, which are considered the main phases that bind heavy metals, include crystallization or decomposition products such as melilite group minerals (gehlenite and akermanite, in particular), spinels (such as magnetite and other spinels from the aluminum spinel subgroup), plagioclase feldspar, (pseudo)wollastonite, metal inclusions, and lime (Eusden et al., 1999; Wei et al., 2011).

As for the mineralogy of dry discharged IBA, Bourtsalas (2015) analyzed the as-received IBA fine fraction (d < 1 mm) produced by the Swiss MSWI plant in Monthey. The major crystalline phases reported were quartz, calcite, gehlenite, and hematite. These results are in good agreement with the findings of Inkaew et al. (2016) and Yang et al. (2016), who reported quartz, gehlenite, calcite, and lime as the main phases of unquenched IBA sampled from Japanese MSWI plants. Chlorides were reported to be bound mostly to the amorphous glassy fraction of dry-extracted IBA (Yang et al., 2016).

In summary, although waste composition and thermal treatment conditions affect IBA mineralogy, the cooling (or discharge) methods applied (Yang et al., 2016) and weathering reactions (discussed later) also exert a key role in terms of IBA mineralogy and environmental properties. Table 2 reports the main crystalline phases identified in studies carried out on unquenched, freshly quenched, and weathered IBA samples, in which the content of the amorphous glassy fraction ranges from 40 to around 70 %.

Water cooling (quenching) leads to several reactions that modify the chemical, physical, and mineralogical properties of IBA. As investigated in depth by Inkaew et al. (2016), quenching causes the dissolution of soluble salts, the oxidation of Fe and NFe metals, and hydration reactions that lead to the precipitation of new phases (i.e., portlandite, ettringite, gypsum, and Cl-containing crystalline phases such as hydrocalumite and/or Friedel's salt). Quench products and melt particles tend to agglomerate, causing an increase in IBA particle size due to water-bridging, carbonation reactions occurring in the pore water, and hardening of newly formed C-S-H phases.

Furthermore, the phase assemblage that is present after rapid combustion, cooling, and quenching is metastable (far from equilibrium conditions) and therefore highly susceptible to chemical and mineralogical transformations (Bayuseno and Schmahl, 2010). This process, generally termed weathering, involves a complex series of reactions including hydrolysis/hydration, dissociation/precipitation of salts and hydroxides, carbonation (in which lime or portlandite reacts with gaseous CO_2 via a liquid phase, yielding calcite), the formation of clay-like minerals from the glassy phase such as illite or muscovite, oxidation/reduction, and the sorption and formation of solid solutions (Bayuseno and Schmahl, 2010; Costa et al., 2007; Eusden et al., 1999; Kirby and Rimstidt, 1993; Meima and Comans, 1997; Zevenbergen et al., 1998). In particular, phases such as gypsum, ettringite, calcite, and hydroxides such as ferrihydrite and gibbsite have been indicated as the main weathering products (Chimenos et al., 2003; Meima and Comans, 1997; Piantone et al., 2004; Zevenbergen et al., 1998), as has hydrocalumite (Bayuseno and Schmahl, 2010). These phases play a key role in the environmental behavior of IBA, since they have been identified as the ones controlling solubility for the release of metals and metalloids (Meima and Comans, 1997). It should be noted that in samples subject to prolonged weathering, some of these phases such as ettringite, hydrocalumite and Friedel's salt may undergo carbonation reactions (Baciocchi et al., 2010; Inkaew et al., 2016), leading to further changes in pH and the leaching of elements of potential environmental concern, including sulfates.

Metals and metalloids of potential concern, such as Pb, Zn, Cu, Mn, and Cr, were detected mainly in non-silicate minerals (Wei et al., 2011); specifically, Cr, Zn, and Mn were found in spinels, but Cu and Pb were reported to be associated with Fe, Sn, and Zn, present as metallic inclusions bound in the silicate glass matrix (Wei et al., 2011). Cu sulfates and Ba sulfates were also detected in fresh and weathered IBA (Bayuseno and Schmahl, 2010).

The magnetic fraction of IBA was found to contain magnetite, wüstite, and hematite (Bayuseno and Schmahl, 2010; Kirby and Rimstidt, 1993). The latter study reported specifically that metallic iron was not found. As for the mineralogical composition of specific particle size fractions of IBA, Chimenos et al. (2003) found that in the finest fractions (d < 4 mm), gehlenite and albite were the major crystalline

Table 2
Main crystalline phases detected in IBA after dry extraction (or before quenching), after quenching, and after weathering.

Mineral phase	Chemical formula	Unquenched IBA	Quenched IBA	Weathered IBA
Quartz	SiO_2	h, i	b, e, f, g, i	a, c, d, e, f
Cristobalite	SiO_2		g	a, g
Gehlenite	$Ca_2Al_2SiO_7$	h, i	b, e, f, g, i	a, e, f, g
Akermanite	$Ca_2MgSi_2O_7$		b, e	a, e
Alkali Feldspars	$(K,Na)(Al,Si)3O_8$		b, c (albite),g	g
Plagioclase feldspars	$NaAlSi_3O_8$-$CaAl_2Si_2O_8$	e, i	B, e, i	e
Calcium Pyroxene	$Ca(Mg,Fe)Si_2O_6$		b, g	g
Wollastonite	$CaSiO_3$		b, f, g	f, g
Lime	CaO	e, i	b	
Portlandite	$Ca(OH)_2$		c, g	
Magnetite	Fe_3O_4	e	e, f, g	a, e, f, g
Hematite	Fe_2O_3	h, i	i, f, g	d, f, g
Wüstite	FeO		f, g	f, g
Calcite	$CaCO_3$	h, i	e, i, f, g	a, c, d, e, f, g
Goethite	FeO(OH)			d
Corundum	Al_2O_3		e	e
Gibbsite	$Al(OH)_3$			d
Anhydrite	$CaSO_4$		c, e, g	d, g
Gypsum	$CaSO_4\ 2H_2O$			a, g
Hydrocalumite	$Ca_2Al(OH)_6Cl_{1-x}(OH)_x\ 3H_2O$		f, i	e
Friedel's salt	$Ca_2Al(OH)_6Cl\ 2H_2O$		i	
Ettringite	$Ca6Al_2(SO_4)_3\ (OH)_{12}\ 26H_2O$			a, c, d, e

References: a) (Zevenbergen et al., 1998); b) (Eusden et al., 1999); c) (Chimenos et al., 2003); d) (Piantone et al., 2004); e) (Bayuseno and Schmahl, 2010); f) (Wei et al., 2011); g) (Santos et al., 2013); h) (Bourtsalas, 2015); i) (Inkaew et al., 2016).

phases containing aluminum, while metallic aluminum was the main Al source in the coarser ones.

2.3. Material composition

IBA material composition is usually within the following ranges: 5–15 % Fe metals, 1–5% NFe metals, 10–30 % glass and ceramics, 1–5% unburned organics, and 50–70 % minerals. However, IBA is a very heterogeneous material and its composition is determined by the composition of the incinerated waste and the operating conditions of waste incineration (Hyks and Astrup, 2009). The efficiency of various recovery techniques is affected mostly by the particle size of the recoverable material. Therefore, the overall content, the particle size distribution, and the liberation of the recoverable materials are key factors for determining the potential of recovery of valuable materials from IBA.

Fe metals content is usually 5–15 %. Muchová (2010) reported that Fe scrap content varied from 8 to 13 % of the IBA from the Amsterdam MSWI plant. Wieduwilt et al. (2015) found the average Fe scrap content in IBA from Switzerland to be 9%. Šyc et al. (2018a) reported 6–11 % in the IBA from a Czech MSWI plant, whereas in IBA from plants that incinerated mostly MSW, the Fe scrap content was 9–11 %. Fe scrap generally presents a coarse particle size; more than 80 % of the Fe scrap total content is in particles larger than 1 cm.

The NFe metals content is usually reported to be 1.0–5.0%. As the most abundant of NFe metals, Al was found to amount to 1–2% of IBA, according to Allegrini et al. (2014); Berkhout et al. (2011) and Biganzoli and Grosso (2013). Allegrini et al. (2014) analyzed material flows in a BA treatment plant and determined the average content of NFe metals in Danish wet discharged IBA to be 2.2 %. NFe metal content in 2–8, 8–16, and 16–50 mm BA fractions was nearly the same, i.e., approximately 3.1–3.5 %. They also reported that approximately 70 % of the NFe metals was aluminum. IBA from two Spanish MSWI plants analyzed by Chimenos et al. (1999) contained 2–4% NFe metals, of which 90 % was aluminum. Muchová (2010) found the average content of NFe metals in IBA from an Amsterdam MSWI plant to be 2.3 %; more than 80 % of the metals were in free form, i.e., recoverable without IBA crushing. About one-half of the NFe metals were in particles greater than 20 mm. Aluminum was dominant in particles from 6 to 20 mm (60 %); in particles smaller than 2 mm, Cu was the most prevalent (90 %). öyc et al. (2018a) found the average NFe metals content in IBA from three Czech MSWI plants to be 1.3–2.8 %, about 4/5 of which made up by aluminum and the rest by heavy non-ferrous (HNFe) metals like Cu, brass, etc. NFe metals were spread equally among all size fractions (öyc et al., 2018a).

Glass recovery has not been widely applied so far to IBA, so very few data about glass content can be found (see Chapter 5). Generally, it can be claimed that the total glass content in IBA varies from 10 to 30 %, depending mainly on the effectiveness and intensity of the separate collection system and on local consumer habits. Chimenos et al. (1999) studied IBA material composition from 2 MSWI plants and found glass as the main component of weathered IBA in particles larger than 4 mm, with the glass content greater than 50 % in particles larger than 1 mm. Glass content decreased in time with an increase of the effectiveness of the separate collection system. Therefore, 15 years later, del Valle-Zermeño et al. (2017) found lower glass content and claimed the total content of glass in IBA to be ca. 26 %. Makari (2014) found an average total glass content in IBA of approximately 20 % at the MSWI plant in Bratislava. öyc et al. (2018a) found total glass content in IBA of 9–23 %, and claimed that with increased co-incineration of commercial waste the content of glass decreased as well. Glass particle size distribution is a crucial factor for its recovery. Glass shards were a main component of particles 4 – 8 mm with a share of over 50 % in this fraction; in the fraction 8 – 16 mm the share of glass was nearly 40 % (del Valle-Zermeño et al., 2017). In particles larger than 16 mm, they reported the share of glass of ca. 10 %, and in particles 2 – 4 mm nearly 30 %. A slightly different distribution was reported by öyc et al. (2018a), who found the maximum glass content in the 8 – 15 mm fraction, in contrast to the findings of del Valle-Zermeño et al. (2017), who reported the maximum amount in 4 – 8 mm particles.

3. Metal recovery

3.1. Basics of metal recovery

Since the 1990s, technologies for NFe metals recovery have emerged in IBA treatment. They are currently common practice in many developed countries. Generally, there are three types of treatment trains:

- dry processing of wet bottom ash,
- wet processing of wet bottom ash,
- dry processing of dry bottom ash.

The choice between dry or wet IBA treatment depends first of all on the IBA discharge system. Two different types of discharge systems exist: wet-based and dry-based. A wet extraction system allows the quenching of the hot IBA by contact with water, and the IBA is subsequently transported with a ram discharger or a chain transport system to a bunker (Lamers, 2015). Dry discharge systems are relatively rare in up-to-date MSWI plants; they have several advantages with respect to metal recovery efficiency, but they are technically more complicated than wet extraction systems (Kahle et al., 2015).

The majority of metal recovery treatment technologies is dry treatment for wet IBA. Wet treatment for wet IBA has emerged mainly in the Netherlands in the last few years as a result of an initiative focused on achieving the same environmental quality of treated IBA and other construction materials including primary materials (AEB, 2015). Dry methods for dry IBA have been particularly proposed in Switzerland; they can lead to increased metal recovery, but the residual IBA cannot be used without further treatment (i.e., wetting and subsequent ageing) and must be landfilled. Up to now, only one plant based on dry treatment of dry IBA has been built in Switzerland, due to the absence of dry IBA discharge from MSWI plants. NFe metals recovery is usually achieved by using eddy current separators (ECS) with several other apparatus and pretreatment steps; IBA treatment trains can contain sieving, magnetic separation, eddy current separation, crushing, wind sifters, a sensor-based sorting system, hand-picking, etc. Density separation could be part of a treatment plant as well, particularly for recovering fine heavy non-ferrous metals (Šyc et al., 2018b; Bunge, 2018).

Metal recovery can take place at the site of the MSWI plant. A simple conventional method is usually employed on-site, except at large centralized MSWI plants with a capacity of at least 400 kt of waste per year; for the latter, it can be economically feasible to build a more advanced plant with greater efficiency. From an economic point of view, the greater investment required for advanced IBA treatment plants – primarily due to the introduction of a crushing stage, the presence of multiplied ECS for each size stream and sensor-based sorting systems for stainless steel – is justified by the increase in NFe metals recovery (Kohaupt, 2011). For small incineration plants that cannot afford such an investment, a good option might be to establish a centralized IBA treatment plant serving several incineration plants or to use mobile treatment plants that can be moved around in accordance with a certain schedule. However, such a mobile plant cannot achieve the same efficiency of fitted and optimized on-site plants (Kallesøe, 2017).

3.2. Bottom ash treatment approaches

There are two main approaches to metal recovery treatment trains (Table 3) (Šyc et al., 2018b)

Table 3
IBA treatment train principles.

Parameter	IBA mineral fraction to be used as subbase layer for road construction	No intention to use IBA mineral fraction
Dry discharge	Not applicable, as there is no preceding ageing process	Optional, as no sticky fine fraction is formed
Wet discharge	Necessary to initiate the ageing reactions	Possible, but causes several problems in metal recovery
Ageing	Necessary for IBA stabilization	Optional for decreasing IBA humidity in case of wet discharge
Crushing	Optional for large IBA fractions with particles larger than 40 mm	Optional for all size fractions for liberating agglomerated metals and increasing recovery efficiency

- maximizing the efficiency of metal recovery with no intention to use the mineral fraction in the construction industry, or
- metal recovery with the use of the mineral fraction in the construction industry.

The entire treatment of the IBA is determined by these aims, starting with the discharge system and ending with, e.g., IBA crushing or ageing. For example, for using IBA as a subbase layer for road construction, wet discharge with subsequent ageing for IBA stabilization is necessary and crushing is limited to large oversized particles over 40 mm. On the contrary, if there is no intention to use the mineral fraction of IBA dry discharge has several advantages and increase metal recovery from fine particels. Also crushing of the complete IBA liberates metals agglomerated with minerals.

Many bottom ash treatment plants have been built across Europe in recent years. Each plant is nearly unique; however, the principles of pretreatment and separation methods are similar. Recent data show that an average of 63 kg of iron scrap and 17 kg of NFe metals are recovered per ton of raw IBA (Simon and Holm, 2017a, b). A further increase in recovery efficiency can be achieved, e.g., by pre-drying IBA, splitting it into several size fractions, or crushing the coarse fraction to release metals contained in ash agglomerates (Walker, 2010). A correctly designed treatment plant should, in fact, include crushing, sieving, Fe and NFe separators, and possibly other technologies for the recovery of the stainless steel and for the separation of the finest and stickiest particles (by drying or with technologies such as the ADR described in Chapter 3.3.4). Sieving is necessary to obtain different material flows of a selected size, with a magnetic separator and an eddy current separator sequentially located on each stream (Bunge, 2018).

Overall, the recovery rate of NFe metals is essentially determined by the treatment train setup; advanced ones can produce up to 30 kg per ton of raw IBA. The recovery rate increases with the number of apparatus in the treatment train, e.g. 12 ECSs are employed in a treatment train that can recover more than 20 kg of NFe metals per ton of IBA (Kuchta and Enzner, 2015). On the other hand, the increased recovery rate may result in increased energy consumption. The average electricity consumption is 3 kWh per ton of treated IBA, but for some plants up to 15 kWh were reported (European Integrated Pollution Prevention and Control Bureau (EIPPCB), 2018).

3.3. Pretreatment operations

3.3.1. Ageing

Ageing (or weathering) is a technique used mostly to treat the bulk of IBA before the metal recovery process or the residual mineral fractions before they are disposed of in a landfill or processed for use as a construction material (Bayuseno and Schmahl, 2010). Ageing improves IBA leaching properties, decreases its water content, and stabilizes the meta-reactive IBA matrix. Ageing occurs naturally during storage before further treatment. The storage usually lasts for 4–12 weeks and is occasionally prolonged up to one year. A substantial decrease in water content takes place during storage of the IBA under atmospheric conditions. For example, a decrease from over 20 % by weight to below 5% by weight in 6 weeks during the summer and in 3 months or less during the winter has been reported (Walker, 2010). A low moisture content results in higher metal recovery rates, but can cause problems with dust emissions during treatment. The optimal IBA humidity for metal recovery is 10–15 %. On the other hand, ageing affects the metals speciation and leachability in IBA. Numerous studies have assessed the alteration processes occurring during IBA ageing (Meima and Comans, 1997; Polettini and Pomi, 2004; Speiser et al., 2000). It is assumed that the most important exothermal reactions causing the temperature increase are the hydration of alkali and alkaline earth oxides, the corrosion of metals, and the carbonation of portlandite ($Ca(OH)_2$) to calcite ($CaCO_3$) (Sabbas et al., 2003). A detailed description of the reactions proceeding during the ageing process is published elsewhere (Nørgaard et al., 2019).

On the one hand, some researchers have shown that a significant portion of aluminum will undergo oxidation reactions with an up to 30 % loss of metallic aluminum after ten weeks of storage, and with a release of hydrogen gas (Rem et al., 2004). Aluminum oxidation was reported to take for ca. 3 months, presumably because after this period the surface of all Al particles is covered by Al_2O_3. On the other hand, a recent Swedish study investigated real-time corrosion rates of aluminum electrodes placed in a number of piles of IBA during outdoor ageing and found very low initial corrosion rates (< 0.1 mm/yr) and negligible corrosion rates (< 0.001 mm/yr) even after 3 months of outdoor ageing (Hedenstedt et al., 2016). Iron corrosion by chloride and sulfate ions and transformation to iron hydroxide will take place under a strongly alkaline environment such as that of IBA, as well. Cu and brass particles will not undergo corrosion; hence, their content does not decrease while IBA weathers (Bunge, 2018).

3.3.2. Sieving

Accurate fractioning of IBA is a crucial step for improving the recovery of metals. Sieving makes it possible to obtain narrow-fractioned material flows that are homogeneous in terms of particle size, thereby optimizing the efficiency of the downstream magnetic separation system, ECS, or other apparatus. The distribution of the elements into different grain size fractions varies, but is not so diverse that certain elements could be recovered or significantly concentrated simply by sieving (Yao et al., 2013; Huber et al., 2019).

In conventional plants, the IBA is usually sieved in two or three streams, but the number of fractions can increase in advanced plants and can reach even 6–9 fractions, in order to optimize metal recovery by using ECS calibrated to the specific material sizes.

The type of sieve to be selected in the sorting system depends on the sizing (Kahle et al., 2015):

-
  - for oversized items, it is common to install a simple finger sieve or bar sizer;
  - drum (trommel) sieves are often used for intermediate size fractioning;
  - flip flow screens are commonly used for the fine fractioning of wet IBA. A flexible, perforated rubber screen oscillates, while the material travels across the screen. The shaking ensures that the material is mixed and allows the fine fraction to pass through the perforations. Like the flip flow screen is the vibrating screen, which vibrates instead of oscillating.

Sieving and transporting wet IBA can generally be performed in open systems, although this is not a completely dust-free operation. Dry sorting systems aim to ensure a water content of 10–12 % by weight. In the case of higher water content, difficulties arise when sieving because the IBA can clump. If the water content is lower than 10 %, the working environment will become very dusty, requiring fully enclosed operations during the handling of the material (Kahle et al., 2015).

Sieving is usually performed on vibrating screens without the addition of water (Bunge, 2018). For wet processing, wet sieving (e.g. wet drums) can also be used, particularly for particles below 4 mm, as this allows to recover "rinsed" metal particles and reduces stickiness (see also chapter 3.5.2.2) (Born, 2018a).

3.3.3. Crushing

Crushing is a fundamental step to improve metal recovery, because it allows the liberation of the metal particles trapped inside the mineral conglomerates. It is often employed for particles larger than 40 mm (Bunge, 2018; van de Wouw et al., 2020).

IBA size reduction is currently performed only in large centralized treatment plants to improve the recovery efficiency of NFe metals. In this way, the mineral materials sticking to metal lumps are removed and the large mineral conglomerates are crushed or pulverized. This provides access to the small metal particles usually trapped in the mineral conglomerates, thus increasing the recovery efficiency of ECS. Crushing IBA size fractions greater than 40 mm has no detrimental effect on mineral fraction application in the construction industry and is often employed. Crushing smaller particles changes the IBA particle size distribution and thus can preclude residual fraction utilization, particularly as an unbound road subbase layer, where natural IBA granulometry is required (Hyks and Hjelmar, 2018). For other applications, e.g. for cement or concrete production as is common in Italy, crushing down to 2 − 4 mm is a required pretreatment step (Zammarian and Cavagnaro, 2018). However, these applications are not common, so after metal recovery, crushed IBA is often landfilled. So the decision whether to include crushing in the treatment train should be made with the IBA's final use in mind.

3.3.4. Ballistic separation

Ballistic separation is one of the unique methods to increase NFe metal recovery. A ballistic separator is used in the process called Advanced Dry Recovery (ADR). This process was developed in a cooperation between Inashco company and TU Delft (Berkhout and Rem, 2010); details are specified in patent WO 2009/123452 A1. According to the patent, the ballistic separator mechanically separates the fine particles smaller than about 2 mm, which are associated with the highest moisture content and cause the material to stick, from the coarse and heavy particles, especially particles 2 − 15 mm in size. IBA processed by ADR can be classified by particle size and is accessible for conventional dry separation processes without previous drying or wetting. The particle size distribution shows that the medium and coarse fractions were efficiently freed of fine particles, which lowered the moisture content in these fractions and led to increased NFe metals recovery (De Vries et al., 2009). In practice, ADR is used mainly for particles smaller than 12 mm, because fine particles stuck to coarse ones worsens recovery efficiency, particularly for this size fraction (Sormunen et al., 2017; Sormunen and Kolisoja, 2017).

The Swiss company DHZ, under the trademark supersort®fine pss, uses ballistic separator to treat the IBA's fine fraction (< 5 mm). A ballistic separator can throw fine particles with different sizes and densities to different distances. Coarse and dense particles are separated from fine (< 0.5 mm) and light ones. The heavy fraction is then led to ECS, which achieves greater recovery efficiency (Zust, 2018). No humidity adjustment is needed before processing.

Ballistic separators are not a common part of treatment trains, but they are sometimes used as described above.

3.4. Treatment operations

3.4.1. Magnetic separation

The principles and limitations of separation in magnetic filed are described in the literature (Martens and Goldmann, 2016). As a standard practice for recovering Fe scrap, only basic magnetic separation is carried out at the sites of most MSWI plants. In the simplest version of the treatment, this is usually done just after the IBA discharge, by means of an overbelt or drum magnets. This method of separation is used only for large pieces of scrap. Multi-step magnetic separation is usually employed for each stream in an advanced treatment plant. Overbelt magnets are used for Fe scrap; in a second stage, drum magnets are often used to remove the magnetic fraction (iron oxides and agglomerates with their content), because the magnetic fraction lowers NFe separation efficiency on ECSs. This magnetic fraction is often later returned from the treatment train to the IBA's mineral residue.

3.4.2. Eddy current separation

The principles and limitations of eddy current separators (ECS) are well described in the literature (Smith et al., 2019). The ECS requires a proper calibration, based on the size of the material to be separated. Furthermore, it is a good practice to adopt a different rotation speed of the rotors when the ECS is used on coarse rather than on fine particles: a rotation of 2000–3000 rpm typical of standard ECS is appropriate only for particles larger than 5 mm. To achieve high recovery efficiency of the NFe metals in the IBA fine fraction < 5 mm, an advanced ECS with a rotation speed greater than 4000 rpm is required and/or the number of poles must be increased. High-frequency ECSs and ECSs with an eccentric rotor specifically designed for fine particles have been marketed in recent years and are currently in use in some full-scale IBA treatment plants.

Other technologies have been proposed in the scientific literature, but many of them have never been developed full scale. This is the case with wet eddy current separators (WECSs), Magnus ECSs, and backward operating ECSs (Fraunholcz et al., 2002; Settimo et al., 2004; Zhang et al., 1999). A backward operating ECS is a standard separator whose magnetic drum rotates "backwards". Zhang et al. (1999) showed that, if it is difficult to separate small metal particles from the non-metal stream when the magnetic drum rotates in "forward" mode, the yield improves drastically when it rotates in the opposite direction.

The Magnus ECS is based on the "Magnus effect": a spinning particle moving through a fluid experiences a force perpendicular both to its direction of motion and to its axis of rotation (Fraunholcz et al., 2002). This effect can be used to recover small NFe metal particles from the bulk stream (both wet and dry). The Magnus separation process consists of directing a feed stream past a fast-spinning magnet to selectively rotate the NFe metal particles, deflecting them from the stream by the Magnus effect. Since this force derives from the fluid around the particles, it is not necessary to feed the material in a monolayer (Settimo et al., 2004). In a wet ECS, the water makes it possible to glue all the particles to the belt surface. For small particles, this adhesive force has the same order of magnitude as gravity. Without the action of the rotor, therefore, virtually all particles would stick to the belt and end up in the non-metal fraction. However, the rotating magnetic field makes the metal particles (whether Fe or NFe) spin, with the effect that the water bonds between these particles and the belt are broken. If the magnetic attraction on the Fe particles is strong enough, these will remain on the surface of the belt, but the NFe metal particles will be liberated at some point and follow the same path as on a traditional ECS. In contrast, the adhesive force is strong enough to keep most of the non-metal particles glued to the belt surface. Since the force necessary to break the adhesive forces is small, poorly conducting metals and HNFe are also recovered (Settimo et al., 2004).

3.4.3. Sensor-based sorting

The latest developments in IBA processing include the use of sensors

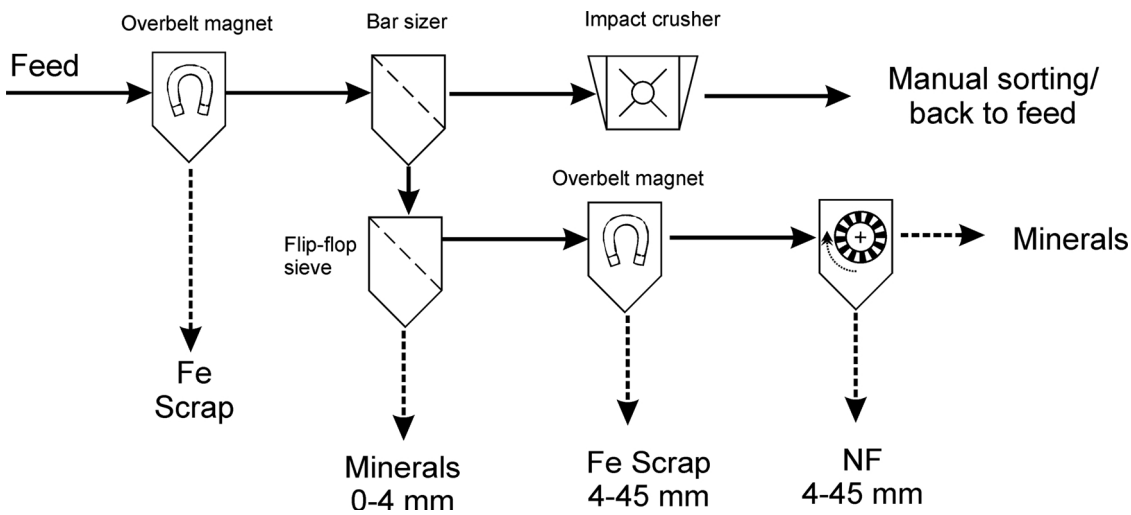

Fig. 2. Scheme of conventional dry treatment of wet IBA (Schmelzer, 1995).

for separating metal and glass particles (Bunge, 2018; Julius and Pretz, 2012). The most common is magnetic induction separation by electromagnetic sensors that can identify all kinds of metals, including stainless steel, in particles larger than 4 mm. Both the recovery rate and grade can exceed 90 %. The sensor is placed under the conveyor belt, where the transported IBA must be spread out in a thin layer. A computer system evaluates the position of the detected metals and operates a set of compressed air nozzles. The selected piece of metal is then ejected from the stream of falling particles at the end of the conveyor belt.

Other types of sensors can be used as well, e.g. X-ray fluorescence for the detection of different metals, optical sensors for transparent materials, or cameras for distinguishing materials by color or shape. Due to the complexity of these systems, to the high demands on computing power, and to the significant costs for compressed air, sensor-based separation is currently suitable for separating materials with greater economic value, such as electronics waste. Currently, they are not a common part of treatment trains, but they are sometimes used; for example, an induction sorting system (ISS) is in operation at the Afatek IBA sorting plant in Copenhagen, Denmark, where stainless steel particles as small as 8 mm are separated (Kallesøe and Dyhr-Jensen, 2018) (see Chapter 3.5.1.2).

3.4.4. Separation by density

Density separation is one of the emerging technologies for IBA treatment that focus on the fine fraction in which considerable amounts of elemental metals are present, i.e., between 10–20 % in the fraction of particles smaller than 2 mm (Bunge, 2018, 2016. Here classical methods such as eddy current separation can exhibit low recovery yields. Chemically bound metals, such as copper, zinc and lead oxides or carbonates, cannot be separated using these methods at all. Density separation is based on the different density of several valuable metals or alloys, such as copper, gold, brass density over 4000 kg m^{-3} compared to an IBA matrix density usually below 2700 kg m^{-3}. Aluminum cannot be separated using this method because its density 2700 kg m^{-3}) resembles that of the IBA matrix.

Holm et al. (2018) performed density separation using a centrifugal concentrator. They achieved an enrichment factor of up to 10, but the yield of valuables ranged only between 10 and 20 %. Flotation and density separation are both technologies with wide applications in the treatment of metal ores. Although the copper concentration in IBA is approximately that of today's exploited ores, it seems that these processes cannot be easily adapted for application in the waste sector. Obviously, the presence of reactive substances such as CaO, metal chlorides, sulfates, and substances enabling hydraulic reactions (see above) are detrimental to the success of separation (Simon and Holm, 2017a, b).

3.5. Examples of treatment trains

3.5.1. Dry treatment of wet IBA

Efficiently recovering metal from the IBA of a MSWI plant equipped with wet discharge is a challenge because of the IBA's sticky character of its hardening that occurs after some time. The water content of the IBA after quenching is around 18–25 %, depending on the discharge system's ability to effectively squeeze out the water. As previously discussed in chapter 2.2, the quench process changes the IBA's mineralogical composition, mainly through the exothermal reaction of CaO with water (Inkaew et al., 2016)

$$CaO + H_2O \rightarrow Ca(OH)_2$$

and the subsequent hardening of lime via its reaction with atmospheric carbon dioxide (carbonation) during IBA storage (Hollemann et al., 2007)

$$Ca(OH)_2 + CO_2 \rightarrow CaCO_3 + H_2O.$$

Further hydrated products are Friedel's salt and hydrocalumite. These newly formed phases, found mainly in the IBA fine fraction, lead to hardening and cementation and thus to the formation of mineral incrustation on metal and melt particles (Inkaew et al., 2016). Therefore, the main objective of the dry treatment of wet IBA for the recovery of metals is to minimize the detrimental effects of the formation of quench products. Some innovative methods, like ballistic separators, are mentioned above; similarly, the IBA can be aged to decrease its moisture.

3.5.1.1. Conventional treatment train. A first pilot installation was reported by Schmelzer (1995). In this process, IBA was pretreated by drying and screening into two fractions: < 4 mm and 4 – 45 mm. Each fraction underwent magnetic and eddy current separation to recover Fe and NFe metals. The residue of the larger fraction was crushed and fed back to the process. Fig. 2 depicts the scheme of the treatment plants. The average output from magnetic separation was 36 % by weight; the iron content in this fraction was only 20–30 %, due to agglomeration with mineral material. The fraction separated as NFe metals constituted 1.9 % by weight of the total IBA (Schmelzer, 1995).

The simplest treatment trains that were built in the 2000s include sieving into a maximum of two fractions that are then treated separately by magnetic and eddy current separators. For the recovery efficiency of these so-called conventional technologies, values of around 80

% for Fe metals and 9–48 % for NFe metals (86 % for the coarse fraction > 20 mm), calculated in terms as ratio of recovered metals per metals fed into the furnace, can be found in the literature (Grosso et al., 2011; Von Raven et al., 2013). A problem with these data is the fact that the exact input of metals to the process of municipal solid waste incineration is not known. Further, the concentrate grade, i.e the mass of metal in the concentrate per mass of concentrate, is below 100 %. A detailed discussion on terms related to the recovery efficiency can be found elsewhere (Bunge, 2018). These treatment trains are often employed directly in medium- to low-capacity MSWI plants.

3.5.1.2. Advanced treatment trains. Many efforts to increase the recovery efficiency of conventional treatment trains for both Fe and NFe metals have been driven by the increasing prices of metals, environmental concerns, and, in recent years, the EU strategy for critical elements and the circular economy. Moreover, the mineral product obtained after an efficient separation of metals can be used as construction material with fewer undesirable consequences, such as the swelling caused by the content of metallic elements. In some countries, these changes are mandatory by legislation. For example, in Switzerland, NFe metals must be recovered with state-of-the-art techniques from the fraction of particles larger than 2 mm, so that the remaining content of NFe metals in the residues destined to landfilling is below 1.5 % by weight. The Netherlands' Green Deal recently imposed similar approach (Born, 2018a). These legal acts and economic incentives led to the development and construction of several advanced treatment trains with a high metals recovery efficiency.

The Afatek NFe sorting plant is an example of an advanced treatment plant for processing quenched IBA. This plant was built in the greater Copenhagen area in 2015 and commissioned in 2016, following several years of research and pilot-scale testing (Allegrini et al., 2014). Between 2016 and 2018, the IBA processing method at this facility was further optimized (Nørgaard et al., 2019); the facility currently processes 200,000–250,000 tons of IBA per year (~40 % of Danish IBA production) originating from six nearby MSW incinerators. The initial processing step includes 2–3 months of outdoor ageing in piles, necessary to decrease the IBA's moisture content and to improve the material's leaching behavior (Nørgaard et al., 2019). The ageing is followed by the removal of magnetic metals just before the material enters the NFe sorting facility. Here, the incoming bulk of the IBA (< 50 mm) is first screened into seven particle size fractions. Six of those seven particle size fractions (0.5 – 1 mm, 1 – 2 mm, 2 – 4 mm, 4 – 9 mm, 9 – 18 mm, and 18 – 50 mm) are then treated in dedicated lines, while the < 0.5 mm fraction is currently not treated and is passed to the outgoing material stream. All lines are equipped with eddy current separators to remove Al and HNFe while the 9 – 18 mm and 18 – 50 mm lines are also equipped with inductive sorting systems that target stainless steel. The outputs from the NFe sorting plant include stainless steel (9 – 50 mm), aluminum (0.5 – 50 mm), and the NFe-heavy fraction (0.5 – 50 mm) (Fig. 3).

To obtain a high NFe metal recovery rate, the system is operated such that the NFe output streams contain some minerals. The mixture is sent for further upgrading to a specialized external facility. According to previous measurements (Kallesøe and Dyhr-Jensen, 2018), the overall recovery rate of NFe metals for 4 – 50 mm IBA is close to 90 %, and for 1 – 4 mm IBA is around 60–75 %. The recovery rate for 0.5 – 1 mm particles was not measured. Note that these rates are calculated based on the actual amount of metal/product sold on the metal market, and not on the amount of metal sorted out of the IBA, which contains mineral ballast. Finally, it is important to mention that Afatek does not extensively crush the IBA to liberate metals. Although crushing could result in even better recovery rates in some particle size fractions, it would also result in an unfavorable particle size distribution curve of the bulk IBA after metal recovery. This would have a negative impact on the possibilities to use the remaining IBA. All Danish IBA is now used as secondary construction material in underground applications (e.g., subbase in road construction, filler in embankments, noise reduction barriers, etc.).

Another interesting plant is the one reported by Holm and Simon (2017). This treatment plant is located in Germany and produced high-quality recovered metals by using a crusher to pretreat of the aged IBA and high-speed impact crushers to separate the mineral fraction from NFe metals. Magnets and eddy current separators are used after sieving IBA into three grain size fractions. Whereas the IBA fraction of particles < 2 mm is often excluded from further treatment, in this plant special focus is placed on the fine fraction. The treatment line was completed in 2015 and includes magnetic separation by means of extra-strong magnets, as well as a drying step before the adapted high-speed rotation accelerator. Subsequently, the material is sieved into three different grain sizes, which are then treated individually with different metal recovery devices (Holm et al., 2016; Holm and Simon, 2017).

3.5.2. Wet treatment of wet IBA

An alternative to the previous approaches is the use of wet technologies that involve the extensive use of water during some of the process steps or during the whole IBA treatment. Two main approaches to wet treatment that have synergetic effects can be exploited. The first is to use wet separation techniques mainly for metal recovery. This wet treatment process was first developed in the Amsterdam MSWI plant as a pilot plant installed in 2005. The first idea was to combine metal separation technology with a process originally used for soil washing to remove residual organics and fine particles. The objective was to produce sand and granulate fractions for building materials and at the same time to recover as much metals as possible (Rem et al., 2004). During the development of the plant, several wet treatment technologies were developed and tested, such as the wet gravity separator, the wet eddy current separator, and the wet magnetic separator (Muchová et al., 2009). After the conventional recovery of Fe and NFe metal particles larger than 20 mm, the residue was screened into several size fractions in a water stream. Each fraction was then treated individually. The recovery efficiency was 83 % for Fe metals and 73 % for NFe metals (Muchová and Rem, 2006). The main disadvantage of this system was its great consumption of water and the consequent costs for water treatment, which is supposedly one of the reasons the plant in Amsterdam was never developed to full scale, but was replaced by ADR (see chapter 3.5.1.2). However, some examples that use full wet treatment can be found (see chapter 3.5.2.1).

The second approach aims mainly to enhance environmentals parameters of IBA fine fractions but it leads also to an increase in the efficiency of the recovery of heavy non-ferrous metals from the IBA fine fraction as wet density separators are used for this fraction. This approach is spreading in the Netherlands, also, except Netherland one plant in Germany and another in Italy are in operation. Almost 60 % of the total sulfate can be concentrated in the ultra-fine fraction approx. (< 0.25 mm) which is separated as a filter cake (Simon and Holm, 2019). To avoid the formation of mineral coatings on metals, the treatment method does not include ageing. Again, the main drawback is water consumption and all related issues, such as water treatment and cleaning. An example of the wet method for IBA improving is described in chapter 3.5.2.2.

3.5.2.1. An example of wet separation for metals recovery. An example of a wet treatment train mainly for metal recovery is reported by G. Stockinger; the Brantner&Co. plant, located on a landfill, has been in operation since 2013 (Boehnke et al., 2015; Stockinger, 2018). Its capacity is nearly 40,000 tons of IBA a year and it treats fresh IBA from one MSWI plant. The treatment starts with a two-step magnetic separation of iron scrap particles larger than 50 mm from those smaller than 50 mm, using an overbelt magnet (see Fig. 4. The core equipment is a wet jig that removes fine particles from larger ones and separates IBA by density. Four output streams, separated by density,

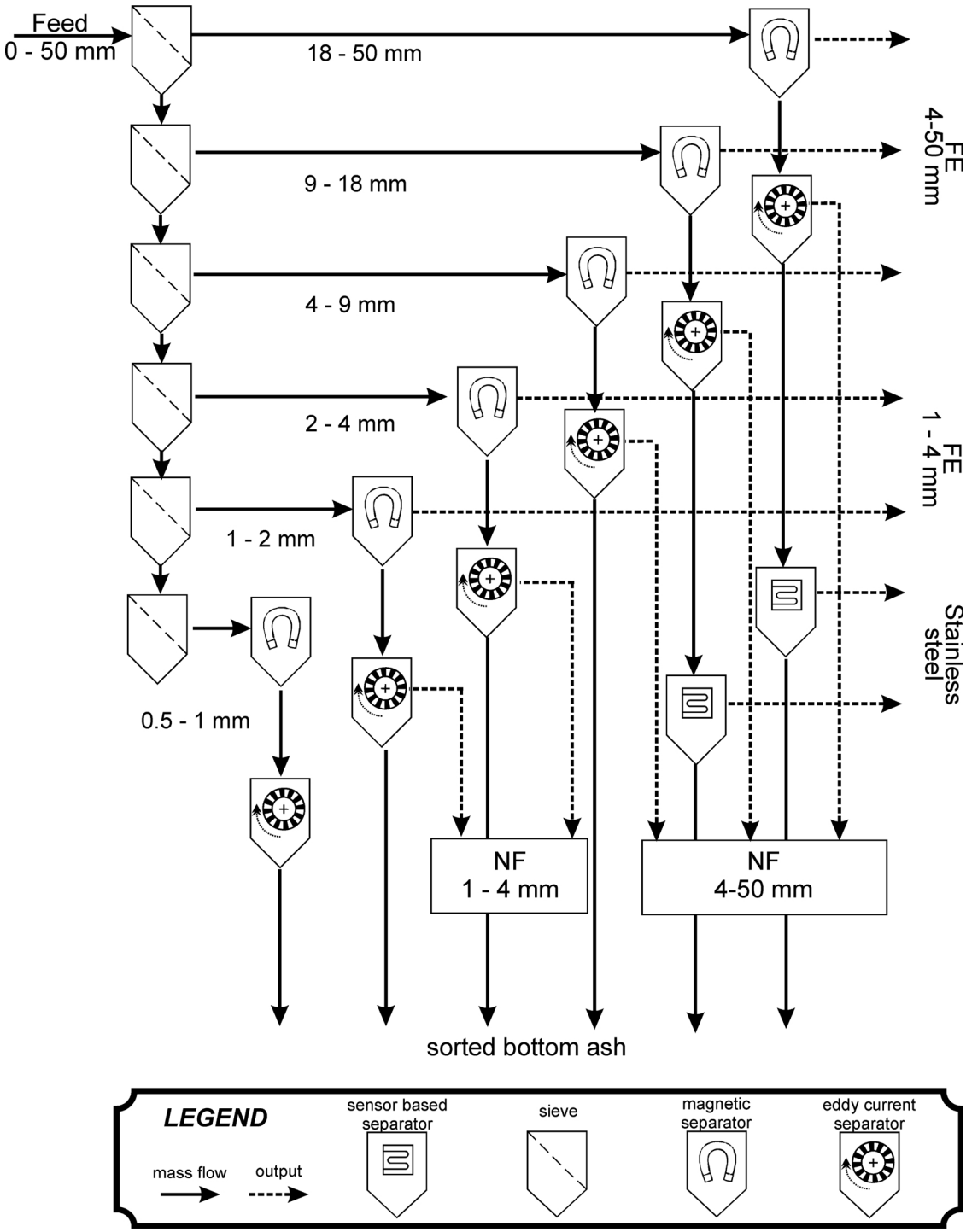

Fig. 3. Example of an advanced dry treatment train for wet IBA (Kallesøe and Dyhr-Jensen, 2018).

come from the wet jig. The floating fraction consists of plastics and other unburned materials. The heavy non-ferrous metals fraction with a density greater than 4,000 kg/ m^3 remains on the jig bottom and contains stainless steel, copper, brass, and precious metals; as metals are washed, they can be led directly to smelting plant. The light fraction has a medium density and contains a mineral matrix of IBA, including aluminum. Fine particles smaller than 2 mm are removed from this fraction in a wet jig; aluminum can then be effectively separated with reasonable efficiency in one step by an eddy current separator after dewatering. Al content in the IBA particles larger than 1 mm after treatment is declared to be 0.1-0.5 %. The last output is water containing a fraction of particles smaller than 2 mm that must be further treated; solid particles are removed by hydrocyclone and further processed for metal recovery. All the water is then recirculated in the process. Particles smaller than 2 mm are led to the fine slag treatment plant of the Sepro urban mining company (Boehnke et al., 2015), where metal particles as small as 100 μm can be separated. The treatment train here consists of a low-intensity wet drum magnetic separator and Falcon centrifugal gravity concentrators followed by a wet shaking table for final upgrading; this system is based on density separation and therefore efficient for heavy non-ferrous metals, including precious metals.

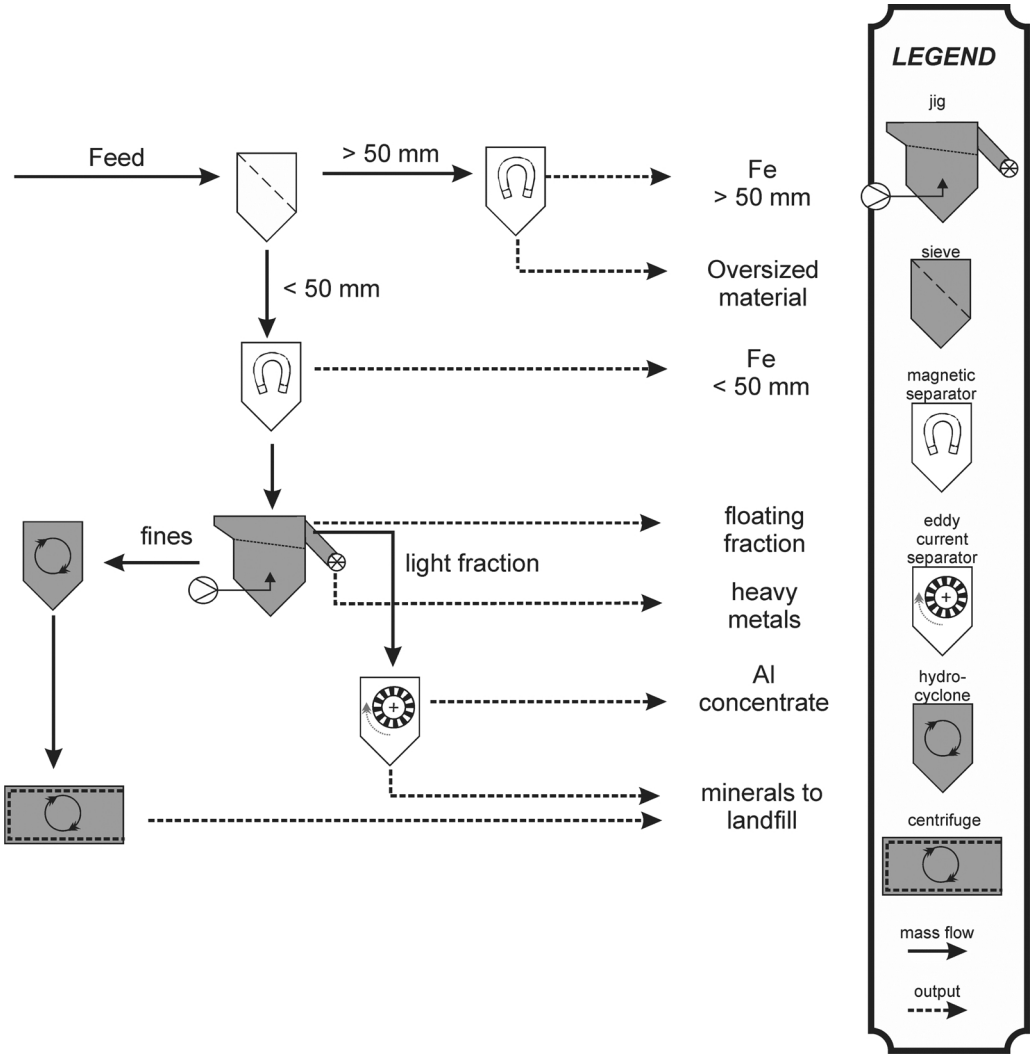

Fig. 4. Scheme of the Brantner company wet separation treatment train (wet processing in gray scale) (Stockinger, 2018).

3.5.2.2. An example of enhancing the recovery potential of the mineral fraction of IBA by wet separation. A wet method for improving the leaching behavior of the mineral fraction of IBA has been developed by the Boskalis Company in response to the Netherlands' Green Deal, which sets stricter requirements on IBA leaching to allow its free reuse. The aim of this technology is to separate metals and then wash out soluble salts and metals from the IBA mineral fraction. Most leachable heavy metals or environmentally hazardous elements are in the fine fraction, so only this fraction undergoes washing treatment. The principle is a modification of the technology used for soil cleaning and remediation. It was installed in 2016 in Alkmaar during the retrofitting of the IBA treatment plant; its annual capacity is nearly 240,000 tons of IBA. The core of the change consisted in substituting dry sieving for a wet drum sieve.

Fig. 5 shows the scheme of the treatment train. Particles larger than 40 mm are separated from the raw IBA by a bar sizer and led into the crusher. Iron scrap and stainless steel are removed by magnetic separation from the particles larger than 40 mm. Particles smaller than 40 mm are led into the wet drum sieve to remove particles smaller than 4 mm; the remainder is then further sorted into 4–8, 8–20, and 20 – 40 mm fractions by a vibrating screen and a drum sieve. Water consumption is below 0.5 m^3/t IBA. Particles larger than 20 mm are led to the crusher and back into the input. Two ECSs in series separate NFe metals from the 4–8 and 8 – 20 mm fractions. Particles smaller than 4 mm are further separated into a sludge fraction of particles smaller than 63 µm and a sand fraction with particles sized 63 µm to 4 mm. Only heavy non-ferrous metals, including precious metals, are separated by density separation from the sand fraction, while light non-ferrous remain. The washed-out sand fraction is then mixed with the granulate fraction with particles sized 4 – 20 mm; this mixture complies with Dutch legislation for aggregates and is used in construction industry. The removal of fine particles increased the efficiency of NFe metals separation by ca. one third – from 2.6 to 3.5 % of the input IBA – compared with the output of dry sieving, because coarse metallic particles are more accessible for separation. Moreover, another 0.3 % of the HNFe is obtained from the sand fraction.

The total metal recovery, including non-ferrous metals, iron scrap and stainless steel, is 11.85 % of the input IBA. The company claimed an Au content of 50 mg/kg and an Ag content of 900 mg/kg in the HNFe particles smaller than 4 mm, and about two-third of the revenues from this fraction come from its precious metals content. NFe metal concentrates from ECSs consist of about half IBA mineral matrix and half NFe metals with the amount of HNFe increasing as the fractions grow smaller (from 1/5 for 8 – 20 mm to 1/3 for 4 – 8 mm). The production of the applicable fraction (the mixture of granulate and sand) is ca. 181,000 tons. The main drawback of this approach seems to be the production of sludge (ca. 50,000 tons) with a high concentration of heavy metals that have hazardous properties and must be further treated. The mass balance at the Alkmaar plant is shown in Table 4 (Born, 2018b, 2018a).

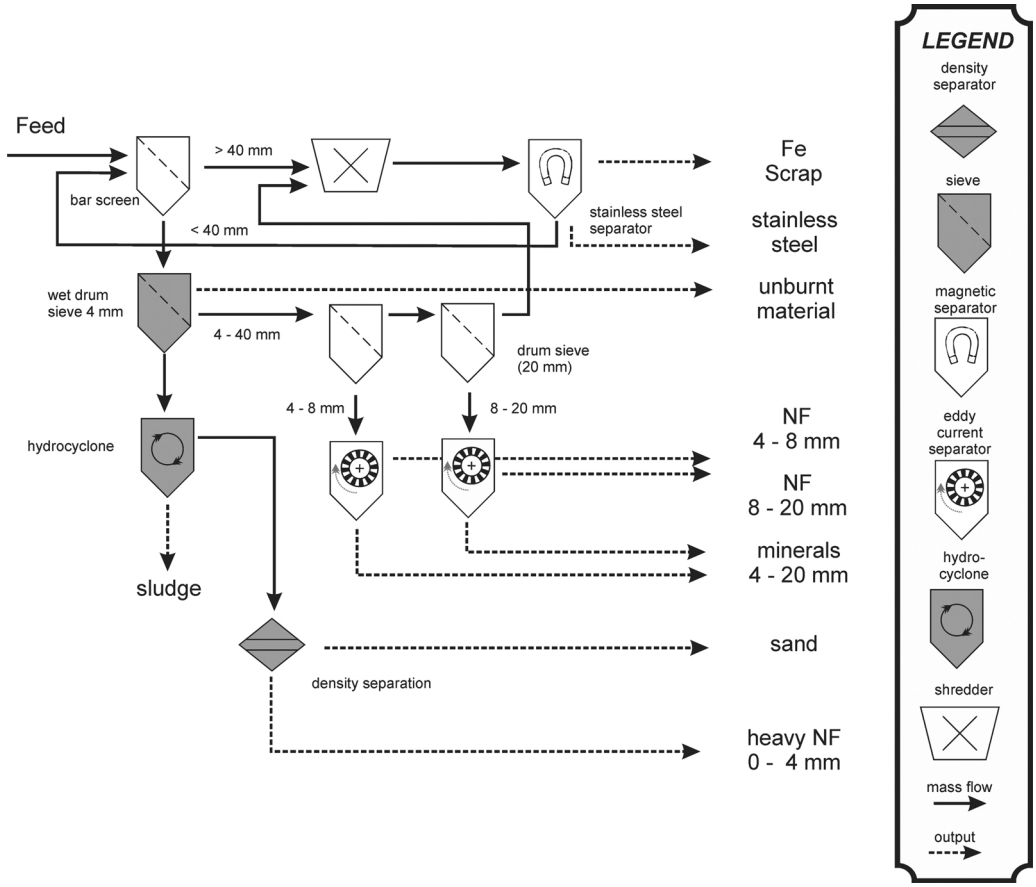

Fig. 5. Scheme of the Alkmaar plant (wet processing in gray scale) (Born, 2018b, 2018a).

Table 4
Annual mass balance at the Alkmaar plant (Born, 2018b, 2018a).

Input IBA (t)	235,866
Output streams	
Sludge (t)	49,745
Sand (t)	99,745
Granulate (t)	81,610
Iron scrap (t)	15,965
Stainless steel (t)	2,590
Unburned material (t)	4,168
NFe (t)	8,321
HNFe ≤ 4 mm (t)	800

A similar approach is used at the Heros plant in the Netherlands, which treats 650,000 t of IBA per year. After ageing and the separation of the Fe scraps, the IBA is sieved into 9 size classes. The fractions of particles smaller than 10 mm are sent to the ADR process to separate the light and sticky fine mineral particles. Then each size class is sent to an ECS to recover the NFe metals the ECSs used for the fine fractions have a rotation speed of 4000 rpm. Downstream from this section, the IBA is ground and sieved again into 6 other size classes. An ECS for each size class is dedicated to recovering NFe metals scraps, and then the stainless steel is separated manually. The mineral fraction with particles > 4 mm is washed with water liquid to solid ratio L/S equal to about 4 l/kg to remove chlorides, sulfates, and metals so that the fraction can be used in free application as required by the Netherlands' new Green Deal legislation. NFe metal particles < 12 mm are further treated to improve their quality by using densimetric tables to separate the light NFe metals (aluminum) from the heavy ones, that contain also precious metals.

3.5.3. *Dry treatment of dry extracted IBA*

Residues from municipal solid waste incineration, such as fly ash, flue gas cleaning products, and IBA, have been the subject of research projects for decades. Early research programs in Canada and the USA were the National Incinerator Testing and Evaluation Program (NITEP) (Sawell and Constable, 1993) and the Waste Analysis, Sampling, Testing, and Evaluation (WASTE) program (A. J. Chandler and Ass. Ltd. et al., 1995). During a sampling campaign at the Burnaby Incinerator Facility (Burnaby, British Columbia, Canada), unquenched IBA falling off the grate before the water tank was collected with a special sample thief. So, it was possible to study the characteristics of unquenched IBA. The results of these investigations of the ash from Burnaby were published years later (Eusden et al., 1999).

No recommendations were made regarding the potential of metals recovery from quenched and unquenched IBA. However, inspired by this work, researchers from the ABB Corporate Research Centre sampled dry IBA with a similar approach at a Swiss waste incineration plant (KVA Turgi, Aargau Canton). The method's obvious advantages for resource recovery from unquenched IBA, i.e., no mineral attachments on glass, ceramics, or slag particles and almost uncorroded metals were recognized and led to the development of what is called the ABB InRec process (Simon and Andersson, 1995). After lab tests on small and large samples, a full-scale dry IBA extraction system was installed at the GEVAG waste incineration plant (Trimmis, Graubünden Canton, Switzerland) and operated in the years 1995 and 1996 for several months using a roller screen consisting of rotating polygonal discs as an integral part of the discharge system for the removal of oversized grains (Selinger and Schmidt, 1997). The basic principle of the InRec process was to remove the fraction of particles smaller than 2 mm, e.g. by a flip-flop screen prior to the recovery of Fe and NFe metals (Bürgin et al., 1995). Fe and NFe metals were recovered from the IBA fraction of

particles > 2 mm using a magnet drum and a pilot-scale eddy current separator to generate a reliable sample size of the metal fraction for testing quality and purity. The yields of Fe and NFe metals were 17 % and 1.4 % by weight, respectively. The purity of the NFe metals fraction was 95 % (Simon, 2017). Despite positive results from the operation of the dry ash extraction and treatment system in Trimmis, plant operators displayed no further interest, most probably because recovering secondary resources from waste was still a secondary issue in the 1990s.

This started to change with the increasing demand for efficiency in NFe metals recovery and also with the challenge to recover other materials, such as rare earth elements (REE) and precious metals (Morf et al., 2013), so that the replacement of wet IBA discharge from the combustion chamber by dry systems experienced a renaissance. A new full-scale dry IBA extraction system was put in operation in 2009 again at the SATOM plant in Switzerland (Monthey, Wallis Canton). It consists of a ram discharger operated without water and an integrated wind sifter for dust removal (Lamers, 2015). The coarse fraction is transported by means of gravity and vibration for further sorting. A second full-scale system with a different design started in 2010 at the KEZO plant (Hinwil, Zurich Canton, Switzerland). The main component is a vibrating conveyor. The inlet of tertiary air is limited to about 10 % of the total combustion air by two vertical gates and replaces the same amount of secondary air. Tertiary air also promotes the afterburning of organic components in the ashes and reduces the organic carbon levels to lower than 0.3 % (Lamers, 2015). Currently, dry extraction of the IBA has been implemented in five plants in Switzerland and in two plants in Italy.

Dry discharge allows greater efficiency in metals recovery because it eases screening into defined particle size fractions and the possible treatment of fine particles. Furthermore, metals are not agglomerated into clusters by sticky, wet fine ash particles and are more easily accessible by technologies such as eddy current separators. Other advantages are savings in water consumption and treatment and thus reduced transport costs, reduction of the organic carbon content, and improved leaching properties of the resulting IBA. The main drawbacks of this concept are dust formation, i.e., all operations must be performed in closed systems (Böni and Morf, 2018; Quicker et al., 2015), and that the IBA mineral fraction cannot be used in the construction industry without further treatment.

At the KEZO MSWI plant in Hinwil (Zurich Canton), a new centralized treatment plant was built to recover metals from all the IBA produced by MSWI plants in the canton of Zurich. The plant was designed to treat 200,000 tons of IBA per year with an investment of 40 million CHF and began operation at the beginning of the year 2017. The plant scheme is shown in Fig. 6. After a magnet separates the coarse metal scraps (> 80 mm), the IBA is divided into four streams: particles sized > 80 mm, 30 – 80 mm, 12 – 30 mm, and < 12 mm. The fraction of particles larger than 80 mm is sent to a handpicking station to recover metals and separate large mineral agglomerates and then is crushed and joins the fraction of particles < 80 mm. The fraction of 30 – 80 mm particles is sent to a magnetic separator, two stainless steel separators, and an ECS and then is crushed and joins the fraction of particles < 30 mm. The fraction of 12 – 30 mm particles is sent to a magnetic separator, a glass separator, two stainless steel (SS) separators, and an ECS and then is crushed and joins the fraction of particles smaller than 12 mm. The fine fraction is screened again: the fraction of particles < 0.3 mm is not treated; the fraction of particles 0.3 – 2 mm is sent to two magnetic separators and two high-frequency ECS.

The NFe metal mix is then upgraded by separating the light fraction (mainly Al) from the heavy fraction (mainly Cu and precious metals) by means of densimetric tables. The recovery rate is as follows – 10.08 % of the IBA was recovered as Fe metals, 4.45 % as NFe metals (heavy and light), and 1.07 % as glass (Böni, 2013; ZAR, 2011). However, the composition of revenues is very different, because the heavy non-ferrous yield is only 0.52 % and accounts for about half of the total revenues (due to its precious metals content), iron scrap about 7%, and light NFe metals account for the rest of the revenues. Total revenues are reported as 95 CHF per ton of dry bottom ash. Energy consumption is about 16 kWh per ton of bottom ash (Böni and Morf, 2018).

3.6. Emerging technologies for recovering metals and metal compounds

Aside from the technologies described above, several attempts to mine metals from bottom ash using unconventional approaches are summarized below. None of them is currently applied at full industrial scale and their application cannot be expected in the near future due to several disadvantages or economical infeasibility. However, a summary of them seems appropriate for this review.

3.6.1. Landfill mining

The chapters above describe state-of-the-art processes for recovering valuables from IBA after the incineration of municipal solid waste. As mentioned above, in the past IBA used to be disposed of in landfills without any prior material recovery. Reclamation of metals on such landfill sites seems to be feasible if the content of elemental metals in old IBA deposits is high enough for profitable landfill mining projects. Wagner and Raymond report on a case study at an ashfill located near a waste incineration plant in the US state of Maine (Wagner and Raymond, 2015). Between 2011 and 2015, more than 35,000 tons of Fe and NFe metal were recovered and sent to metal recycling companies at a cost of approx. $158 US per ton of metal. Revenues were a minimum of $216 US per ton of recovered, so that the operation provided an economic gain. However, it was stated that it is far less costly to recover metals *before* landfilling.

3.6.2. Bioleaching, hydrometallurgy

Hydrometallurgy is the separation of metals from ore minerals using acids or bases. Hydrometallurgical separation is also performed by solvent extraction or by means of solid ion exchangers, ionic liquids, membranes, and other adsorbents. Biohydrometallurgy, i.e., a chemical extraction enhanced by microorganisms, is a widely and increasingly studied branch of hydrometallurgy and is successfully employed in the treatment of mine tailings and in metal recovery from secondary sources (Hennebel et al., 2015). As a matter of fact, the industrial use of bioleaching already started at the end of the 19th century: the Rio Tinto copper mine in southwestern Spain is considered the first large-scale biohydrometallurgical operation. In recent decades, bio-mediated processes were progressively increased also for the treatment of by-products (e.g., for the recovery of gold from tailings in Nerco Can Mine, Canada (Stefanski and Martin, 1992).

Recently, biohydrometallurgical routes have been applied to the treatment of and subsequent metal recovery from waste from electrical and electronic equipment (WEEE) (Mäkinen et al., 2015) and a range of alkaline wastes (Lee and Pandey, 2012), including MSWI residues in which, according to bench-scale experiments, base metals like Cu, Al, and Zn are profitably extracted (Funari et al., 2017; Lee and Pandey, 2012; Ramanathan and Ting, 2016). The treatment of IBA using bioleaching via acidophilic bacteria seems a scalable process, but the lack of experimental data on larger scales hinders the breakthrough to full-scale bioprocessing of incineration waste. After earlier experience with MSWI fly ash (Funari et al., 2017), mixed cultures of sulfur- and iron-oxidizing bacteria were tested on pre-acidified IBA collected from different Italian MSWI plants (Funari et al., 2015). The bacteria consortium employed thrived under the starting pH conditions (ca. pH 4) and produced lixiviants capable of reducing the pH (Funari et al., 2019), thus enhancing metal removal. The relatively long time needed to attain low pH values, the need to pretreat an alkaline material, and the lack of pilot plants hamper actual implementation of the bio-assisted leaching of metals from IBA. On the other hand, the possibility to produce consortia of microorganisms that can be tuned to the removal of a specific metal, the low consumption of acid (or base) compared to pure hydrometallurgical routes, and a safer work environment are

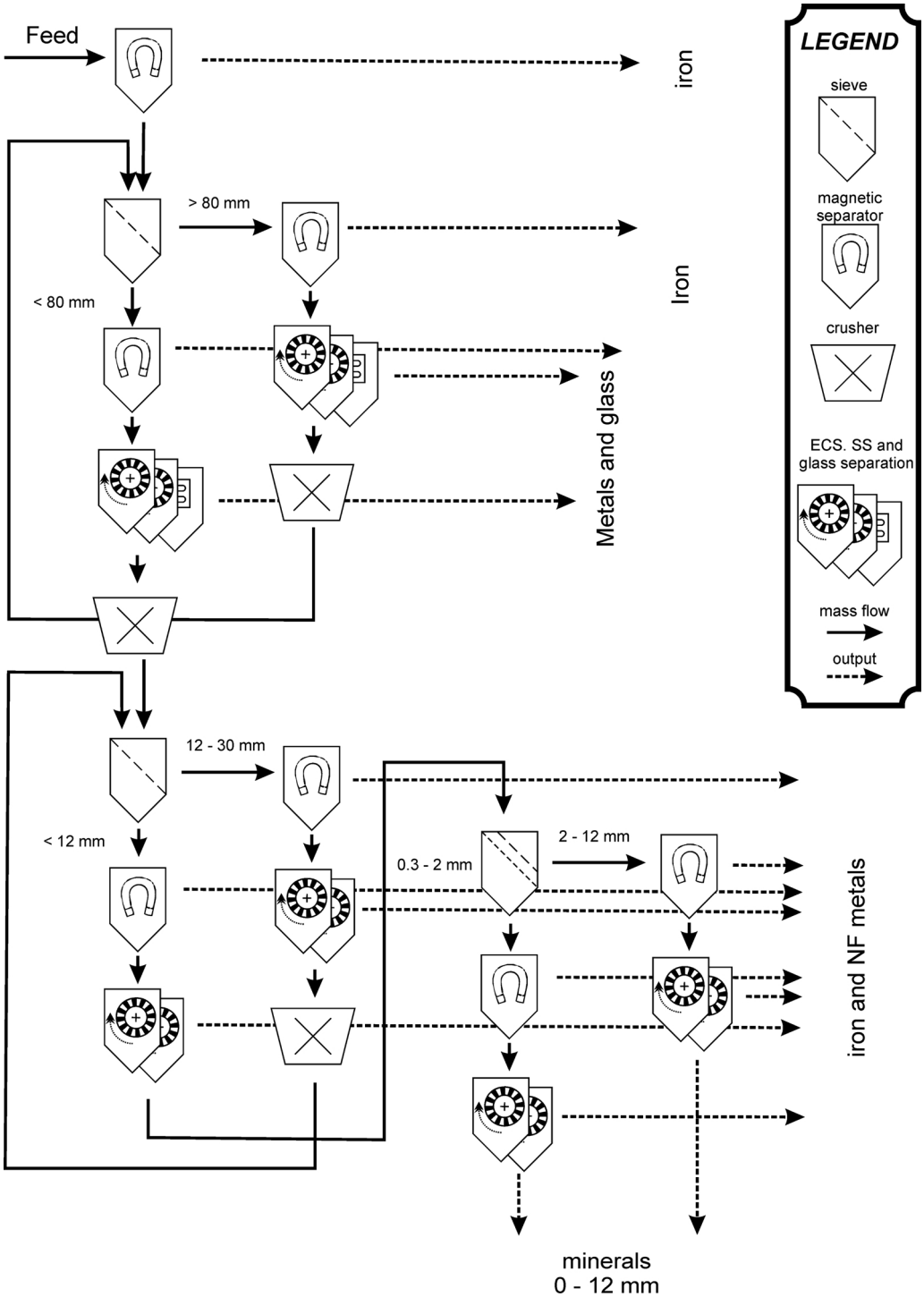

Fig. 6. Scheme of the dry bottom ash treatment plant in Hinwil (CH) (Böni and Morf, 2018).

potential advantages that make bioleaching an intriguing option.

Bioprocessing alkaline wastes, however, has other drawbacks. The sulfur content that is converted to sulfuric acid in the IBA, mainly promoted by *At. thiooxidans*, is not enough to change the naturally alkaline IBA pH (pH 10–13) to acidic pH levels allowing metals mobilization. Besides, the imbalance between elemental sulfur addition and microbial growth of sulfur-specific consortia might lead to low leaching rates, due to the passivation effect that typically occurs in metal sulfide bioleaching (Piervandi et al., 2019). Optimal amounts of ferrous iron to sustain an active microbial population of iron oxidizers (like *At. ferrooxidans*) should be determined, also to enhance synergistic bioleaching effects. In these circumstances, a stepwise inoculation strategy or nutrients addition can regulate the microbial community structure to promote secondary microbial growth to maintain a moderate trade-off between microbial community performance and iron and sulfur metabolism (Feng et al., 2015; Panda et al., 2017) in effective bioleaching systems. Finally, IBA treated in this way will have acidic pH and the formation of calcium sulfate is promoted (Funari et al., 2017). If the pH is not neutralized, therefore, such IBA can be considered hazardous material that cannot be used in the construction industry. Thus, bioleaching is currently far from the real industrial practice and much further research has to be done.

3.6.3. Electrodynamic fragmentation

Electrodynamic fragmentation to disintegrate ore and rocks to obtain higher yields has been studied since the 1960s. Today, this technique is applied on a technical scale in ore processing (Wang et al., 2011). Applying this process to recycle construction and demolition waste and incineration ash was suggested already in the year 2000 (Bluhm et al., 2000). In a research project, IBA was fragmented into metals, smelting products, ceramics, stones and glass (Seifert et al., 2013). A drawback of the technology could be the high consumption of electrical energy (1 − 3 kWh/ton of mineral material) (Wang et al., 2011) and, as the process takes place under water, electrolytic losses in the course of enriching salts in the process water (Bluhm et al., 2000). This might be the reason why a prototype with a capacity of 3 tons per hour that started operation in 2016 at the SAIDEF plant in Posieux (Fribourg Canton, Switzerland) is fed with washed IBA. The SELFRAG company's investment cost to install electrodynamic fragmentation was 6 million Swiss francs (SAIDEF AG, 2016).

4. Metal upgrading and the market situation

As indicated in previous sections, advanced metal recovery from IBA is a highly specialized process and, as such, there are multiple steps in the process, which can be managed by different companies and/or external contractors other than the MSWI plant that generated the IBA. However, as a great variety of technologies have been applied in IBA processing and metal recovery from IBA worldwide, the metal recovery systems differ significantly among countries and even regions. The decision whether to include external contractors in IBA processing and to what extent (to which final quality) the metal recovery is done depends on many factors, such as the MSWI's throughput (large vs. small MSWI), the type of IBA (quenched IBA vs. dry IBA; chapter 3.5 and 3.5.3), the location of the IBA treatment plant (on site, at a landfill, at a specialized IBA processing facility, or at a mobile sorting plant), IBA storage options (space limitations), metal recovery technology (dry vs. wet processing), management options for the mineral part of IBA (landfilling vs. use in road constructions), and, naturally, overall economic feasibility (Bunge, 2018).

In many European countries, metal recovery from IBA can be described as a step-wise system typically composed of: Fe recovery; Fe upgrading; NFe recovery; and NFe upgrading.

Overall economic feasibility is one of the key factors affecting the recovery of metals from IBA. The economic value of NFe metals is significantly higher than that of Fe metals. The value of metals (including both Fe and NFe) in ton of "typical" IBA has been estimated at between 60 and 100 €, of which > 85 % is allocated to the NFe fraction, while this fraction is estimated to contribute only 10–15 % of the weight of the total metal content (Bunge, 2018). Consequently, the recovery and upgrading of NFe has received much greater attention lately.

The Fe upgrading step typically consist of cleaning (e.g. by crushing) the Fe (in IBA from which extraneous material such as slag and rust has already been separated), hand-sorting the more valuable items (e.g. Fe and Cu parts), and passing the cleaned material through a magnetic separator (or a series of magnetic separators) to concentrate the material stream to a quality suitable for secondary steel production (Allegrini et al., 2014). The fraction of Fe particles smaller than approximately 3 − 4 mm is still relatively unused, while its composition and quality may vary significantly. Low-quality products (e.g., those having a high proportion of corrosion products) require higher processing costs at the smelters and, therefore, are less profitable than higher-quality products, which, on the other hand, can cost more to produce.

While the first couple of steps in metal recovery from IBA can take place at an MSWI plant, at an IBA deposit/monofill (Wagner and Raymond, 2015), and/or at a primary IBA sorting plant (often a centralized facility processing IBA from several MSWI plants or a mobile sorting facility), the last step (i.e., NFe upgrading) often requires a rather specialized set-up that is fine-tuned to process "pre-products" or "concentrates" obtained at the MSWI plants and/or the primary IBA sorting plants. Indeed, these "pre-products" or "concentrates" could be (and sometimes are) sold to a third party; however, since they often contain adhering mineral material and/or impurities in the form of other metals, their purity is low, which results in a low smelting yield and, in turn, in a low market value. To be accepted directly by smelters/foundries and, consequently, to achieve better market value, the "pre-products" or "concentrates" must be upgraded. In general, the types of "pre-products" or "concentrates" generated during the primary NFe recovery that are then processed at NFe-upgrading facilities are: light non-ferrous, LNFe (predominantly aluminum); heavy non-ferrous, HNFe (Cu, brass, stainless steel, Zn, Pb, Au, Ag, and coins); or a mixture of these. Often, the "pre-products" or "concentrates" are produced with different gradation (in different particle size ranges) depending on the set-up of the NFe recovery system. The upper particle size boundary of "pre-products" or "concentrates" is found around 50 − 80 mm, as larger NFe items are typically removed either by the MSWI plants or at the primary IBA treatment plants. Though the lower particle size boundary of the "pre-products" or "concentrates" may differ based on both their origin and the technology used in the receiving NFe-upgrading facility (i.e., dry vs. wet systems), as a rule of thumb, "pre-products" or "concentrates" generated at full-scale *mobile* sorting plants have shown larger minimum particle sizes (varying between 2–8 mm) than those generated at full-scale *stationary* sorting plants (varying between 1–2 mm). Note that the economic potential of NFe recovery from the 1 − 2 mm fraction is significant and several companies are developing sorting systems targeting the recovery of HNFe/precious metals from the very fine NFe fraction (Holm and Simon, 2017; Muchová et al., 2009).

The actual technological set-up of NFe-upgrading facilities is often proprietary and cannot be described in full detail here. Nevertheless, a "typical" dry-based NFe upgrading (i.e., one without a wash plant) can include drying and mechanical removal of remaining inorganic matrix/dust. The now cleaned and dry "pre-products" or "concentrates" can then be treated by a series of, e.g., ECSs, ISSs, X-ray sorting systems, or even hand-sorting to some extent. The result can be clean scrap ("product"), often divided into different material streams (e.g. stainless steel, aluminum, copper, and a mixture of precious metals) of high purity, allowing for direct sales to smelters/foundries (Muchová et al., 2009).

In general, the different "products" (e.g. Al product, Cu product, stainless steel, precious metals mix, etc.) are sold on the commodity market; their sales price is controlled by the list price at the London Metal Exchange (LME): LME_{price}. However, since the "products" are further treated at the smelters, the sales price may also depend on a processing costs fee and on an achievable yield (Scanmetals, 2016). For instance, the sales price of an Al product can be determined as indicated in Eq. (1):

$$\text{Sales price} = (LME_{price} - \text{processing fee}) \times \text{yield} \quad (1)$$

Where the LME_{price} (e.g. EUR/ton) is controlled by the LME, the processing fee (e.g. EUR/ton) depends on the receiving smelter and the yield (%; less than 100) – in the case of aluminum – is a function of (i) the "product's" particle size gradation (particle size affects the degree of surface oxidation) and (ii) the smelting process. Note that different yields can be achieved for different "products" at different smelters; nevertheless, the yield typically decreases with decreasing particle size. From the above equation (Eq. (1)) it is clear that the producer of the Al product used in this example is interested in selling to a smelter that can reach the highest possible yield and thus to fully use the materials' recycling potential. It is stated that the price that sink/float plants or smelters actually pay for the metal content of the NFe concentrate is only approximately 60 % of the LME_{price} (Bunge, 2018).

In contrast to Al, which is oxidized during incineration and whose yield is thus affected by the particle size of the product (the smaller the particle size, the greater the surface oxide content), Cu is not oxidized during incineration and its price is determined by the purity of the Cu product, which is sold directly to copper refineries. As with aluminum, the sales price of the Cu product is determined by the LME list price.

The light fraction has a market value of about 600-1,100 euros/t, while the heavy fraction can achieve up to 4,500-7,000 EUR/t, depending on its precious metals content (personal communication, 2017). With these prices, a substantial increase in revenues can be expected with advanced technologies that are able to recover HNFe metals, including precious metals, from fine particles smaller than 2 − 4 mm. NFe metals' share of total metal revenues from these advanced plants is over 80 %, while precious metals have a share of up to 1/3 (Böni and Morf, 2018; Born, 2018b).

5. Glass recovery

Sensor-based separation of glass was demonstrated at a pilot plant built at the MSWI plant in Bratislava, Slovakia. The technology was supplied by an Austrian company, Binder + Co AG, specialized in glass recycling processes. Before the glass sorting, the IBA is pretreated in a process called "cullet sublimation" to remove adherent dust particles and paper labels, which decrease the efficiency of optical recognition. The pretreatment begins with screening on dynamically excited screens to separate oversized material and fine particles smaller than 7 mm. The resulting middle fraction can contain up to 50 percent glass. In the next step, the material is dried in a fluid-bed dryer that decreases the moisture content to below 1 percent. The dry material is cleaned in a dry-washing process by attrition, followed by cooling and de-dusting. After this stage, an overhead magnet and an eddy current separator separate the metals and finally an optical sensor-based separator sorts out glass. According to information for the year 2013, the amounts of recovered metals were 1753 tons of magnetic metals and 90 tons of NFe metals from about 124,000 tons of incinerated waste. The amounts of recovered glass have not been reported; the recovery rate of glass can reach 75 % (Makari, 2014).

6. Conclusion

Incineration bottom ash is a source of valuable components, such as non-ferrous metals and iron scrap, as it contains up to 5 % NFe metals and 15 % iron scrap. Technologies for their recovery started to emerge in the 1990s and today are common practice in many developed countries. Metal recovery technologies for wet as well as for dry IBA are based mostly on dry-mechanical processes. However, some treatment plants work with a wet method, as well. Metal recovery can take place directly at the MSWI plant or at a centralized IBA treatment plant that receives the material from several different plants. It is necessary to state that a great majority of plants use dry methods for processing wet extracted bottom ash. Regardless of the type of technology, the overall principle is more or less the same, i.e., crushing the oversized fraction, sieving IBA into several narrow size fractions, and applying magnetic separation for ferrous metals, eddy current separation for non-ferrous metals, and sensor-based sorting for stainless steel. The study presented one example of each main approach to metal recovery and outlined their main advantages and drawbacks. However, it is not possible to thoroughly compare the efficiency of different approaches, due to the variability in the content of the metal of the input IBA and the high degree of uncertainty of existing methods for recovery potential determination.

The positive impact of metals recovery on the life cycle balance of MSWI has been quantified in a comparsion of different waste management options (Simon and Holm, 2016, Gehrmann et al., 2017). Efficient recovery of metals and other valuable materials from IBA is a prerequisite for municipal solid waste incineration to be an integral part of a sustainable waste management. Burning waste just to avoid landfilling or only to generate heat and power would be incompatible with the concept of circular economy (Korhonen et al., 2018). With advanced separation techniques, also metals with mm-grain size can be recovered from IBA rather than in recycling processes with bulk municipal soild waste. Thus, the recovery of metals from IBA contributes substantially to close the gaps in circular economy (Steger et al., 2019).

Authors' contributions

Michal Šyc and Franz Georg Simon are responsible for the overall composition and the parts that are not mentioned below. Roberto Braga and Valerio Funari prepared the part about bioleaching. Jiri Hyks prepared the parts about metal upgrading and the market, ageing, and the AFATEK plant. Giulia Costa is the author of the part about mineralogy. Mario Grosso and Laura Biganzoli added Italian experience and details about plants in Italy.

Declaration of Competing Interest

The authors declare that they have no known competing financial interests or personal relationships that could have appeared to influence the work reported in this paper.

Acknowledgements

This article is based upon work from COST Action Mining the European Anthroposphere (CA15115), supported by COST (European Cooperation in Science and Technology). Michal Šyc would like to thank INTER-COST project LTC17051 and project Strategic Partnership for Environmental Technologies and Energy Production (reg.no. CZ.02.1.01/0.0/0.0/16_026/0008413) with the support from the European Union European Structural and Investment Funds "Operational Programme Research, Development and Education" and the Czech Ministry of Education Youth and Sports.

References

AEB, 2015. Green Deal Bottom Ash Programme a Success. online: https://www.aebamsterdam.com/about/news/2015/green-deal-bottom-ash-programme-a-success/ (Accesed 2020.02.09).

Allegrini, E., Maresca, A., Olsson, M.E., Holtze, M.S., Boldrin, A., Astrup, T., 2014. Quantification of the resource recovery potential of municipal solid waste incineration bottom ashes. Waste Manag. 34, 1627–1636. https://doi.org/10.1016/j.wasman.2014.05.003.

Astrup, T., Muntoni, A., Polettini, A., Pomi, R., Van Gerven, T., Van Zomeren, A., 2016. Treatment and reuse of incineration bottom ash. Environmental Materials and Waste: Resource Recovery and Pollution Prevention. https://doi.org/10.1016/B978-0-12-803837-6.00024-X.

Baciocchi, R., Costa, G., Lategano, E., Marini, C., Polettini, A., Pomi, R., Postorino, P., Rocca, S., 2010. Accelerated carbonation of different size fractions of bottom ash from RDF incineration. Waste Manag. 30, 1310–1317. https://doi.org/10.1016/j.wasman.2009.11.027.

Bayuseno, A.P., Schmahl, W.W., 2010. Understanding the chemical and mineralogical properties of the inorganic portion of MSWI bottom ash. Waste Manag. 30, 1509–1520. https://doi.org/10.1016/j.wasman.2010.03.010.

Berkhout, S.P.M., Rem, P.C., 2010. Separation apparatus. Eur. Pat. Off. EP 2, 412 452 A1.

Berkhout, S.P.M., Oudenhoven, B.P.M., Rem, P.C., 2011. Optimizing non-ferrous metal value from MSWI bottom ashes. J. Environ. Prot., Irvine,. Calif. 02, 564–570. https://doi.org/10.4236/jep.2011.25065.

Biganzoli, L., Grosso, M., 2013. Aluminium recovery from waste incineration bottom ash, andits oxidation level. Waste Manag. Res. 31, 954–959. https://doi.org/10.1177/0734242X13493956.

Blasenbauer, D., Huber, F., Lederer, J., Quina, M.J., Blanc-Biscarat, D., Bogush, A., Bontempi, E., Blondeau, J., Chimenos, J.M., Dahlbo, H., Fagerqvist, J., Giro-Paloma, J., Hjelmar, O., Hyks, J., Keaney, J., Lupsea-Toader, M., O'Caollai, C.J., Orupõld, K., Pająk, T., Simon, F.-G., Svecova, L., Šyc, M., Ulvang, R., Vaajasaari, K., van Caneghem, J., van Zomeren, A., Vasarevičius, S., Wégner, K., Fellner, J., 2020. Legal situation and current practice of waste incineration bottom ash utilisation in Europe. Waste Manage. 102, 868–883. https://doi.org/10.1016/j.wasman.2019.11.031.

Bluhm, H., Frey, W., Giese, H., Hoppé, P., Schultheiß, C., Sträßner, R., 2000. Application of pulsed HV discharges to material fragmentation and recycling. IEEE Trans. Dielectr. Electr. Insul. 7, 625–636. https://doi.org/10.1109/94.879358.

Boehnke, J., Gillis, A., Stockinger, G., Bohle, B., 2015. Wet Processing of Incinerator

Bottom Ash for Precious and Base Metals Recovery. Langley, BC,Canada. .
Böni, L., 2013. Accumulation of Recovered Gold From Bottom Ash, How Waste Management Can Turn Into Resource Management. Thesis Kantonsschule Zürcher Unterland.
Böni, D., Morf, L.S., 2018. Thermo-recycling - efficient recovery of valuable materials from dry Bottom ash. In: Holm, O., Thomé-Kozmiensky, E. (Eds.), Removal, Treatment and Utilisation of Waste Incineration Bottom Ash. Thomé-Kozmiensky Verlag GmbH, pp. 25–37.
Born, J.P., 2018a. Mining IBA for precious metals. VDI Conf. Met. Miner. Recover. from IBA, Düsseldorf, Novemb. 8th 2018.
Born, J.P., 2018b. Mining incinerator bottom ash for heavy non-ferrous metals and precious metal. In: Holm, O., Thome-Kozmiensky, E. (Eds.), Removal, Treatment and Utilisation of Waste Incineration Bottom Ash. TK Verlag, Neuruppin, pp. 11–24.
Bourtsalas, A., 2015. Processing the Problematic Fine Fraction of Incinerator Bottom Ash Into a Raw Material for Manufacturing Ceramics, PhD Thesis. Imperial College, London.
Bunge, R., 2016. Aufbereitung von Abfallverbrennungsaschen – Eine Übersicht. In: Thomé-Kozmiensky, K.J. (Ed.), Mineralische Nebenprodukte Und Abfälle. TK-Verlag, Neuruppin, pp. 141–161.
Bunge, R., 2018. Recovery of metals from waste incineration bottom ash. In: Holm, O., Thome-Kozmiensky, E. (Eds.), Removal, Treatment and Utilisation of Waste Incineration Bottom Ash. TK Verlag, Neuruppin, pp. 63–143.
Bürgin, M., Schmidt, V., Simon, F.G., 1995. Verfahren zur Rückgewinnung von Wertstoffen aus Müllverbrennungsschlacke. Eur. Pat. Off. Pat. Appl EP 0691160 A1.
Chandler, A.J., Associates Ltd, 1995. The Waste Analysis, Sampling, Testing and Evaluation (WASTE) Program: the Effect of Waste Stream Characteristics on Municipal Solid Waste Incineration - the Fate and Behaviour of Trace Metals: Volume I: Summary Report of the Study Conducted at the Burnab. Report EPS 3/HA/10. Environment Canada, Waste Treatment Division, Ottawa, Ontario.
Chimenos, J.M., Segarra, M., Fernández, M.A., Espiell, F., 1999. Characterization of the bottom ash in municipal solid waste incinerator. J. Hazard. Mater. 64, 211–222. https://doi.org/10.1016/S0304-3894(98)00246-5.
Chimenos, J.M., Fernández, A.I., Miralles, L., Segarra, M., Espiell, F., 2003. Short-term natural weathering of MSWI bottom ash as a function of particle size. Waste Manag. 23, 887–895. https://doi.org/10.1016/S0956-053X(03)00074-6.
Costa, G., Baciocchi, R., Pomi, R., Carey, P.J., Polettini, A., Hills, C.D., 2007. Current status and perspectives of accelerated carbonation processes on municipal waste combustion residues. Environ. Monit. Assess. https://doi.org/10.1007/s10661-007-9704-4.
De Vries, W., Rem, P.C., Berkhout, S.P.M., 2009. ADR: a new method for dry classification. In: Proceedings of ISWA/APESB World Congress. Lisboa, Portugal. pp. 1–10.
del Valle-Zermeño, R., Gómez-Manrique, J., Giro-Paloma, J., Formosa, J., Chimenos, J.M., 2017. Material characterization of the MSWI bottom ash as a function of particle size. Effects of glass recycling over time. Sci. Total Environ. 581–582, 897–905. https://doi.org/10.1016/j.scitotenv.2017.01.047.
European Integrated Pollution Prevention and Control Bureau (EIPPCB), 2018. Best Available Techniques (BAT) Reference Document on Waste Incineration (final draft, December 2018). Joint Research Centre, Sevilla, Spain.
Eusden, J.D., Eighmy, T.T., Hockert, K., Holland, E., Marsella, K., 1999. Petrogenesis of municipal solid waste combustion bottom ash. Appl. Geochem. 14, 1073–1091. https://doi.org/10.1016/S0883-2927(99)00005-0.
Feng, S., Yang, H., Wang, W., 2015. Improved chalcopyrite bioleaching by Acidithiobacillus sp. Via direct step-wise regulation of microbial community structure. Bioresour. Technol. 192, 75–82. https://doi.org/10.1016/j.biortech.2015.05.055.
Fraunholcz, N., Rem, P.C., Haeser, P.A.C.M., 2002. Dry Magnus separation. Miner. Eng. 15, 45–51. https://doi.org/10.1016/S0892-6875(01)00198-4.
Funari, V., Braga, R., Bokhari, S.N.H., Dinelli, E., Meisel, T., 2015. Solid residues from Italian municipal solid waste incinerators: a source for "critical" raw materials. Waste Manag. 45, 206–216. https://doi.org/10.1016/j.wasman.2014.11.005.
Funari, V., Mäkinen, J., Salminen, J., Braga, R., Dinelli, E., Revitzer, H., 2017. Metal removal from Municipal Solid Waste Incineration fly ash: a comparison between chemical leaching and bioleaching. Waste Manag. 60, 397–406. https://doi.org/10.1016/j.wasman.2016.07.025.
Funari, V., Gomes, H.I., Cappelletti, M., Fedi, S., Dinelli, E., Rogerson, M., Mayes, W.M., Rovere, M., 2019. Optimization routes for the bioleaching of MSWI fly and bottom ashes using microorganisms collected from a natural system. Waste Biomass Valorization. https://doi.org/10.1007/s12649-019-00688-9.
Gehrmann, H.-J., Hiebel, M., Simon, F.G., 2017. Methods for the evaluation of waste treatment processes. J. Eng. 2017, 3567865. https://doi.org/10.1155/2017/3567865. (3567861-3567813).
Grosso, M., Biganzoli, L., Rigamonti, L., 2011. A quantitative estimate of potential aluminium recovery from incineration bottom ashes. Resour. Conserv. Recycl. 55, 1178–1184. https://doi.org/10.1016/j.resconrec.2011.08.001.
Hedenstedt, A., Hjornhede, A., Ryde, D., Johansson, I., Fedje, K.K., 2016. Korrosion vid lagring av slagg från avfallsförbränning. Rapport 2016:304, Stockholm, Sweden.
Hennebel, T., Boon, N., Maes, S., Lenz, M., 2015. Biotechnologies for critical raw material recovery from primary and secondary sources: R&D priorities and future perspectives. N. Biotechnol. 32, 121–127. https://doi.org/10.1016/j.nbt.2013.08.004.
Hollemann, A.F., Wiberg, E., Wiberg, N., 2007. Lehrbuch der Anorganischen Chemie. 102., Lehrbuch der Anorganischen Chemie. Walter de Gruyter, Berlin. https://doi.org/10.1515/9783110177701.
Holm, O., Simon, F.G., 2017. Innovative treatment trains of bottom ash (BA) from municipal solid waste incineration (MSWI) in Germany. Waste Manag. 59, 229–236. https://doi.org/10.1016/j.wasman.2016.09.004.
Holm, O., Simon, F.G., Lübben, S., Gronholz, C., 2016. ATR - Aufschluss, Trennung und Rückgewinnung von ressourcenrelevanten Metallen aus Rückständen thermischer Prozesse mit innovativen Verfahren. In: Dürkoop, A., Brandstetter, C.P., Gräbe, G., Rentsch, L. (Eds.), Innovative Technologien Für Ressourceneffizienz - Strategische Metalle Und Mineralien. Fraunhofer-Verlag, Stuttgart, pp. 181–195.
Holm, O., Wollik, E., Johanna Bley, T., 2018. Recovery of copper from small grain size fractions of municipal solid waste incineration bottom ash by means of density separation. Int. J. Sustain. Eng. 11, 250–260. https://doi.org/10.1080/19397038.2017.1355415.
Huber, F., Blasenbauer, D., Aschenbrenner, P., Fellner, J., 2019. Chemical composition and leachability of differently sized material fractions of municipal solid waste incineration bottom ash. Waste Manage. 95, 593–603. https://doi.org/10.1016/j.wasman.2019.06.047.
Huber, F., Blasenbauer, D., Aschenbrenner, P., Fellner, J., 2020. Complete determination of the material composition of municipal solid waste incineration bottom ash. Waste Manag. 102, 677–685. https://doi.org/10.1016/j.wasman.2019.11.036.
Hyks, J., Astrup, T., 2009. Influence of operational conditions, waste input and ageing on contaminant leaching from waste incinerator bottom ash: a full-scale study. Chemosphere 76 (9), 1178–1184. https://doi.org/10.1016/j.chemosphere.2009.06.040.
Hyks, J., Hjelmar, O., 2018. Utilisation of incineration bottom ash (IBA) from waste incineration – prospects and limits. In: Holm, O., Thomé-Kozmiensky, E. (Eds.), Removal, Treatment and Utilisation of Waste Incineration Bottom Ash. Thomé-Kozmiensky Verlag GmbH, Neuruppin, pp. 11–23 2018.
Inkaew, K., Saffarzadeh, A., Shimaoka, T., 2016. Modeling the formation of the quench product in municipal solid waste incineration (MSWI) bottom ash. Waste Manag. 52, 159–168. https://doi.org/10.1016/j.wasman.2016.03.019.
Julius, J., Pretz, T., 2012. Sensor based sorting in waste processing. In: Gente, V., La Marca, F. (Eds.), Separating Pro-Environment Technologies for Waste Treatment, Soil and Sediments Remediation. Bentham Books, AG Bussum (NL), pp. 59–76.
Kahle, K., Kamuk, B., Kallesøe, J., Fleck, E., Lamers, F., Jacobsson, L., Sahlén, J., 2015. Bottom Ash From WtE Plants Metal Recovery and Utilization. ISWA Report 2015.
Kallesøe, J., 2017. Recovery of Resources in Bottom Ash 2nd Stage. AFATEK Report November.
Kallesøe, J., Dyhr-Jensen, S., 2018. Recovery of Resources in Bottom Ash - Semi Dry Concept, in: Removal, Treatment and Utilisation of Waste Incineration Bottom Ash. Thomé-Kozmiensky Verlag GmbH, pp. 39–46.
Kirby, C.S., Rimstidt, J.D., 1993. Mineralogy and surface properties of municipal solid waste ash. Environ. Sci. Technol. 27, 652–660. https://doi.org/10.1021/es00041a008.
Kohaupt, U., 2011. Global economics of bottom ash processing. In: Proceeding from the Conference "From Ashes to Metals.". Copenhagen, Denmark.
Korhonen, J., Honkasalo, A., Seppälä, J., 2018. Circular economy: the concept and its limitations. Ecol. Econ. 143, 37–46. https://doi.org/10.1016/j.ecolecon.2017.06.041.
Kuchta, K., Enzner, V., 2015. Ressourceneffizienz der Metallrückgewinnung vor und nach der Verbrennung. In: Thomé-Kozmiensky, K.J. (Ed.), Mineralische Nebenprodukte und Abfälle 2. TK Verlag, Neuruppin, pp. 105–116.
Lamers, F., 2015. Treatment of bottom ashes of waste-to-energy installations – State of the art –. In: Thomé-Kozmiensky, K.J., Thiel, S. (Eds.), Waste Management. TK-Verlag, Neuruppin, pp. 271–290.
Lee, J.C., Pandey, B.D., 2012. Bio-processing of solid wastes and secondary resources for metal extraction - A review. Waste Manag. 32, 3–18. https://doi.org/10.1016/j.wasman.2011.08.010.
Lynn, C.J., Ghataora, G.S., Dhir, R.K., 2017. Municipal incinerated bottom ash (MIBA) characteristics and potential for use in road pavements. Int. J. Pavement Res. Technol. 10, 185–201. https://doi.org/10.1016/j.ijprt.2016.12.003.
Makari, C., 2014. Optical sorting for the recovery of glass from WIP slags. In: In: Thomé-Kozmiensky, K.J., Thiel, S. (Eds.), Waste Mangement Volume 4. TK Verlag Karl Thomé-Kozmiensky, pp. 345–354.
Mäkinen, J., Bachér, J., Kaartinen, T., Wahlström, M., Salminen, J., 2015. The effect of flotation and parameters for bioleaching of printed circuit boards. Miner. Eng. 75, 26–31. https://doi.org/10.1016/j.mineng.2015.01.009.
Malinauskaite, J., Jouhara, H., Czajczyńska, D., Stanchev, P., Katsou, E., Rostkowski, P., Thorne, R.J., Colón, J., Ponsá, S., Al-Mansour, F., Anguilano, L., Krzyżyńska, R., López, I.C., Vlasopoulos, A., Spencer, N., 2017. Municipal solid waste management and waste-to-energy in the context of a circular economy and energy recycling in Europe. Energy 141, 2013–2044. https://doi.org/10.1016/j.energy.2017.11.128.
Martens, H., Goldmann, D., 2016. Recyclingtechnik, Fachbuch Für Lehre Und Praxis. Springer Vieweg, Wiesbaden.
Meima, J.A., Comans, R.N.J., 1997. Geochemical modeling of weathering reactions in municipal solid waste incinerator bottom ash. Environ. Sci. Technol. 31, 1269–1276. https://doi.org/10.1021/es9603158.
Morf, L.S., Gloor, R., Haag, O., Haupt, M., Skutan, S., Di Lorenzo, F., Böni, D., 2013. Precious metals and rare earth elements in municipal solid waste - Sources and fate in a Swiss incineration plant. Waste Manag. 33, 634–644. https://doi.org/10.1016/j.wasman.2012.09.010.
Muchová, L., 2010. Wet Physical Separation of MSWI Bottom Ash. PhD Thesis. TU Delft.
Muchová, L., Rem, P.C., 2006. Metal content and recovery of MSWI bottom ash in Amsterdam. WIT Trans. Ecol. Environ. 92, 211–216. https://doi.org/10.2495/WM060231.
Muchová, L., Bakker, E., Rem, P., 2009. Precious metals in municipal solid waste incineration bottom ash. Water, Air, Soil Pollut. Focus 9, 107–116. https://doi.org/10.1007/s11267-008-9191-9.
Nørgaard, K.P., Hyks, J., Mulvad, J.K., Frederiksen, J.O., Hjelmar, O., 2019. Optimizing large-scale ageing of municipal solid waste incinerator bottom ash prior to the advanced metal recovery: phase I: monitoring of temperature, moisture content, and

CO2 level. Waste Manag. 85, 95–105. https://doi.org/10.1016/j.wasman.2018.12.019.
Pan, S.Y., Du, M.A., Huang, I.Te, Liu, I.H., Chang, E.E., Chiang, P.C., 2015. Strategies on implementation of waste-to-energy (WTE) supply chain for circular economy system: a review. J. Clean. Prod. 108, 409–421. https://doi.org/10.1016/j.jclepro.2015.06.124.
Panda, S., Akcil, A., Mishra, S., Erust, C., 2017. Synergistic effect of biogenic Fe^{3+} coupled to S° oxidation on simultaneous bioleaching of Cu, Co, Zn and As from hazardous Pyrite Ash Waste. J. Hazard. Mater. 325, 59–70. https://doi.org/10.1016/j.jhazmat.2016.11.050.
Piantone, P., Bodénan, F., Chatelet-Snidaro, L., 2004. Mineralogical study of secondary mineral phases from weathered MSWI bottom ash: Implications for the modelling and trapping of heavy metals. Appl. Geochem. 19, 1891–1904. https://doi.org/10.1016/j.apgeochem.2004.05.006.
Piervandi, Z., Khodadadi Darban, A., Mousavi, S.M., Abdollahy, M., Asadollahfardi, G., Funari, V., Dinelli, E., 2019. Minimization of metal sulphides bioleaching from mine wastes into the aquatic environment. Ecotoxicol. Environ. Saf. 182, 109443. https://doi.org/10.1016/J.ECOENV.2019.109443.
Polettini, A., Pomi, R., 2004. The leaching behavior of incinerator bottom ash as affected by accelerated ageing. J. Hazard. Mater. 113, 209–215. https://doi.org/10.1016/j.jhazmat.2004.06.009.
Quicker, P., Stockschläder, J., Zayat-Vogel, B., Pretz, T., Garth, A., Koralewska, R., Malek, S., Gellermann, C., Brämer, T., Gabor, E., 2015. Wertstoffpotenziale von trocken und nass ausgetragenen Abfallverbrennungsaschen. In: Thomé-Kozmiensky, K.J. (Ed.), Mineralische Nebenprodukte Und Abfälle 2, Aschen, Schlacken, Stäube Und Baurestmassen. TK Verlag Karl Thomé-Kozmiensky, pp. 117–135.
Ramanathan, T., Ting, Y.P., 2016. Alkaline bioleaching of municipal solid waste incineration fly ash by autochthonous extremophiles. Chemosphere 160, 54–61. https://doi.org/10.1016/j.chemosphere.2016.06.055.
Rem, P.C., De Vries, C., Van Kooy, L., Bevilacqua, P., Reuter, M.A., 2004. The Amsterdam pilot on bottom ash. Miner. Eng. 17, 363–365. https://doi.org/10.1016/j.mineng.2003.11.009.
Sabbas, T., Polettini, A., Pomi, R., Astrup, T., Hjelmar, O., Mostbauer, P., Cappai, G., Magel, G., Salhofer, S., Speiser, C., Heuss-Assbichler, S., Klein, R., Lechner, P., 2003. Management of municipal solid waste incineration residues. Waste Manag. 23, 61–88. https://doi.org/10.1016/S0956-053X(02)00161-7.
SAIDEF AG, 2016. Annual Report 2016. Posieux, Canton Fribourg, Switzerland. .
Santos, R.M., Mertens, G., Salman, M., Cizer, Ö., Van Gerven, T., 2013. Comparative study of ageing, heat treatment and accelerated carbonation for stabilization of municipal solid waste incineration bottom ash in view of reducing regulated heavy metal/metalloid leaching. J. Environ. Manage. 128, 807–821. https://doi.org/10.1016/j.jenvman.2013.06.033.
Sawell, S.E., Constable, T.W., 1993. The National Incinerator Testing and Evaluation Program (NITEP): a Summary of the Characterization and Treatment Studies on Residues From Municipal Solid Waste Incineration. Report EPS 3/UP/8, Environment Canada, Office of Waste Management.
Scanmetals, 2016. Personal Communication.
Schmelzer, G., 1995. Separation of metals from waste incineration residue by application of mineral processing. Proceedings of the XIX International Mineral Processing Congress 137–140.
Seifert, S., Thome, V., Karlstetter, C., Maier, M., 2013. Elektrodynamische Fragmentierung von MVA-Schlacken – Zerlegung der Schlacken und Abscheidung von Chloriden und Sulfaten. In: Thomé-Kozmiensky, K.J. (Ed.), Asche-Schlacke-Stäube Aus Metallurgie Und Abfallverbrennung. TK Verlag Karl Thomé-Kozmiensky, pp. 353–366.
Selinger, A., Schmidt, V., 1997. The ABB dry ash concept: INREC™. In: Goumans, J.J.J.M., Senden, G.J., van der Sloot, H.A. (Eds.), Studies in Environmental Science. Elsevier, Amsterdam, pp. 79–84. https://doi.org/10.1016/S0166-1116(97)80192-6.
Settimo, F., Bevilacqua, P., Rem, P., 2004. Eddy current separation of fine non-ferrous particles from bulk streams. Phys. Sep. Sci. Eng. 13, 15–23. https://doi.org/10.1080/00207390410001710726.
Silva, R.V., de Brito, J., Lynn, C.J., Dhir, R.K., 2019. Environmental impacts of the use of bottom ashes from municipal solid waste incineration: a review. Resour. Conserv. Recycl. 140, 23–35. https://doi.org/10.1016/j.resconrec.2018.09.011.
Simon, F.G., 2017. (formerly ABB Corporate Research Switzerland). Personal Communication.
Simon, F.G., Andersson, K.H., 1995. InRec™ process for recovering materials from solid waste incineration residues. ABB Rev. 15–20.
Simon, F.G., Holm, O., 2017a. Exergetic assessment of raw materials using the example of copper. ChemieIngenieurTechnik 89, 108–116. https://doi.org/10.1002/cite.201600089.
Simon, F.G., Holm, O., 2017b. Metal Recovery From Wet Discharged Bottom Ash, COST Action MINEA Workshop Recovery Technologies for Waste Incineration Residues I, 30-31.5.2017. Bologna, Italy. .
Simon, F., Holm, O., 2019. Antimon in Rostaschen aus der Müllverbrennung – Auslaugverhalten und Rückschlüsse für die Aufbereitung. In: In: Thiel, S., Thomé-Kozmiensky, E., Pretz, T., Senk, D.G., Wotruba, H. (Eds.), Mineralische Nebenprodukte Und Abfälle, Aschen, Schlacken Stäube Und Baurestmassen Vol. 6. TK Verlag, Neuruppin, pp. 148–164.
Smith, Y.R., Nagel, J.R., Rajamani, R.K., 2019. Eddy current separation for recovery of non-ferrous metallic particles: a comprehensive review. Miner. Eng. 133, 149–159. https://doi.org/10.1016/j.mineng.2018.12.025.
Sormunen, L.A., Kolisoja, P., 2017. Construction of an interim storage field using recovered municipal solid waste incineration bottom ash: field performance study. Waste Manag. 64, 107–116. https://doi.org/10.1016/j.wasman.2017.03.014.
Sormunen, L.A., Kalliainen, A., Kolisoja, P., Rantsi, R., 2017. Combining mineral fractions of recovered MSWI bottom ash: improvement for utilization in civil engineering structures. Waste Biomass Valorization 8, 1467–1478. https://doi.org/10.1007/s12649-016-9656-4.
Speiser, C., Baumann, T., Niessner, R., 2000. Morphological and chemical characterization of calcium-hydrate phases formed in alteration processes of deposited municipal solid waste incinerator bottom ash. Environ. Sci. Technol. 34, 5030–5037. https://doi.org/10.1021/es990739c.
Stefanski, M.J., Martin, C.J., 1992. Toxic Stabilization and Precious Metals Recovery From By-products, 223—224, Open File 2484, Geological Survey of Candada, Project Summaries.
Steger, S., Ritthoff, M., Dehoust, G., Bergmann, T., Schüler, D., Kosinka, I., Bulach, W., Krause, P., Oetjen-Dehne, R., 2019. Ressourcenschonung Durch Eine Stoffstromorientierte Sekundärrohstoffwirtschaft (Saving Resources by a Material Category Oriented Recycling Product Industry). TEXTE 34/2019, Umweltbundesamt (Federal Environmental Agency), Dessau.
Stockinger, G., 2018. Direct wet treatment of fresh, wet removed IBA from waste incinerator. In: Holm, O., Thomé-Kozmiensky, E. (Eds.), Removal, Treatment and Utilisation of Waste Incineration Bottom Ash. TK Verlag, Neuruppin, pp. 47–52.
Šyc, M., Krausová, A., Kameníková, P., Šomplák, R., Pavlas, M., Zach, B., Pohořelý, M., Svoboda, K., Punčochář, M., 2018a. Material analysis of Bottom ash from waste-to-energy plants. Waste Manag. 73, 360–366. https://doi.org/10.1016/j.wasman.2017.10.045.
Šyc, M., Simon, F.G., Biganzoli, L., Grosso, M., Hyks, J., 2018b. Resource recovery from incineration Bottom ash: basics, concepts principles. In: Holm, O., Thomé-Kozmiensky, E. (Eds.), Removal, Treatment and Utilisation of Waste Incineration Bottom Ash. Thomé-Kozmiensky Verlag GmbH, pp. 1–10.
Van Caneghem, J., Van Acker, K., De Greef, J., et al., 2019. Waste-to-energy is compatible and complementary with recycling in the circular economy. Clean Techn Environ Policy. 21, 925–939. https://doi.org/10.1007/s10098-019-01686-0.
van de Wouw, P.M.F., Loginova, E., Florea, M.V.A., Brouwers, H.J.H., 2020. Compositional modelling and crushing behaviour of MSWI bottom ash material classes. Waste Manage. 101, 268–282. https://doi.org/10.1016/j.wasman.2019.10.013.
Von Raven, R., Koralewska, R., Schönsteiner, M., 2013. Waste-to-energy as part of urban mining – recovery of metals from bottom ash. In: 8th ISWA Beacon Conference on Waste-to-Energy. Malmö November 27-28, 2013.
Wagner, T.P., Raymond, T., 2015. Landfill mining: case study of a successful metals recovery project. Waste Manag. 45, 448–457. https://doi.org/10.1016/j.wasman.2015.06.034.
Walker, B., 2010. Sortierung und Ablagerung von KVA Schlacke. In: Schenk, K. (Ed.), KVA-Rückstände in Der Schweiz. Der Rohstoff Mit Mehrwert. Bundesamt für Umwelt, pp. 165–169.
Wang, E., Shi, F., Manlapig, E., 2011. Pre-weakening of mineral ores by high voltage pulses. Miner. Eng. 24, 455–462. https://doi.org/10.1016/j.mineng.2010.12.011.
Wei, Y., Shimaoka, T., Saffarzadeh, A., Takahashi, F., 2011. Mineralogical characterization of municipal solid waste incineration bottom ash with an emphasis on heavy metal-bearing phases. J. Hazard. Mater. 187, 534–543. https://doi.org/10.1016/j.jhazmat.2011.01.070.
Wieduwilt, M., Müller, R., Luzzatto, M., Brison, A., 2015. Advanced Urban mining: a summary of the State of the art of metal recovery out of dry Bottom ash. In: In: Thomé-Kozmiensky, K.J., Thiel, S. (Eds.), Waste Management Volume 5 Waste-to-Energy. TK Verlag Karl Thomé-Kozmiensky.
Yang, S., Saffarzadeh, A., Shimaoka, T., Kawano, T., Kakuta, Y., 2016. The impact of thermal treatment and cooling methods on municipal solid waste incineration bottom ash with an emphasis on Cl. Environ. Technol. (United Kingdom) 37, 2564–2571. https://doi.org/10.1080/09593330.2016.1155651.
Yao, J., Kong, Q., Zhu, H., Long, Y., Shen, D., 2013. Content and fractionation of Cu, Zn and Cd in size fractionated municipal solid waste incineration bottom ash. Ecotox. Environ. Safe. 94 (0), 131–137. https://doi.org/10.1016/j.ecoenv.2013.05.014.
Zammarian, L., Cavagnaro, L., 2018. A European example of circular economy. In: VDI Metal and Mineral Recovery from IBA Conference, 7-8. November 2018, Dusseldorf, Germany.
ZAR, 2011. Thermorecycling, 29, Stiftung Zentrum Für Nachhaltige Abfall- Und Ressourcennutzung. Hinwil, Switzerland. .
Zevenbergen, C., Van Reeuwijk, L.P., Bradley, J.P., Comans, R.N.J., Schulung, R.D., 1998. Weathering of MSWI bottom ash with emphasis on the glassy constituents. J. Geochemical Explor. 62, 293–298. https://doi.org/10.1016/S0375-6742(97)00033-2.
Zhang, S., Forssberg, E., Arvidson, B., Moss, W., 1999. Separation mechanisms and criteria of a rotating eddy-current separator operation. Resour. Conserv. Recycl. 25, 215–232. https://doi.org/10.1016/S0921-3449(98)00051-2.
Zust, I., 2018. The benefits of an integrated dry process for metal recovery out of IBA. In: VDI Conference: Metals and Minerals Recovery from IBA, Düsseldorf, November 8th 2018. Dusseldorf.